BLOCK 2 LOT 12
AMERICAN BEACH # 1 PB 2/42

FIRST AMERICAN BEACH HOUSE LLC
675 SEMINOLE AVE STE T04
ATLANTA, GA 30307

2026

00-00-30-010A-0002-0120

NASSAU COUNTY PROPERTY

BUILDING CHARACTERISTICS

ELEMENT	CD	CONSTRUCTION
Exterior Wall	16	WD FR STUC 100
Roof Structur	03	GABLE/HIP 100
Roof Cover	03	COMP SHNGL 100
Interior Wall	02	WALL BD/WD 50
Interior Wall	05	DRYWALL 50
Interior Floo	14	CARPET 80
Interior Floo	08	SHT VINYL 20
Air Condition	03	CENTRAL 100
Heating Type	04	AIR DUCTED 100
Bedrooms		3 100
Bathrooms		2 100
Frame	02	WOOD FRAME 100
Stories	2.	2. 100
Units		0 100
BUD8 Adjustme	05	DIST 1A 100
Quality	06	Quality Level 06
DOR CODE	0100	SINGLE FAMILY
MAP NUM		MKT AREA 03
NEIGHBORHOOD/LOC	3038.00	

AREA TYPE	TOTAL GROSS AREA	PCT OF BASE	YEAR	TOT ADJ AREA	SUBAREA MARKET VALUE
APT	504	100	1993	504	150,747
BAL	150	15	2020	22	6,580
FGR	408	55	1993	224	66,999
FOP	268	30	1993	80	23,928
FOP	150	30	2020	45	13,460
FUS	1,348	100	1993	1,348	403,190
FUS	819	100	2020	819	244,964
STR	36	10	1993	4	1,197
STR	54	10	1993	5	1,496
TOTALS	3,737			3,051	912,559

MARKET ADJUSTMENTS

TYPE	MDL	EFF. AREA	TOT ADJ PTS	EFF. BASE RATE	REPL. COST NEW	AYB	EYB	ECON	FNCT		NORM	% COND
0500	12	3,051	186.7140	309.95	945,657	1938	2018	0	0	0	3.50	96.50

1 SFR CUST 0% - 0 Heated Area: 2671 HX Base Yr

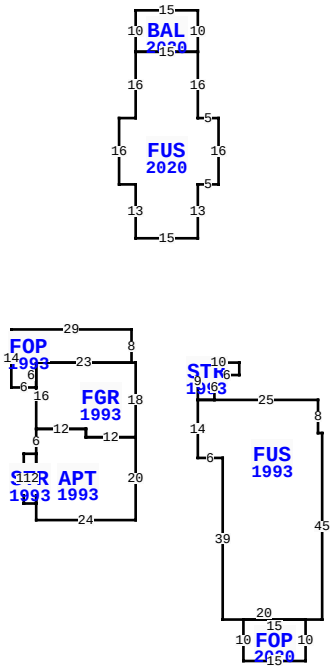

5466 GREGG ST, FERNANDINA BEACH

BLD DATE		LGL DATE	
XF DATE		LAND DATE	05/05/2026 MLU
INC DATE		AG DATE	

VALUATION SUMMARY

VALUATION BY	STANDARD
Tax Group: 8	Tax Dist:
BUILDING MARKET VALUE	912,559
TOTAL MARKET OB/XF VALUE	1,574
TOTAL LAND VALUE - MARKET	1,250,000
TOTAL MARKET VALUE	2,164,133
SOH/AGL Deduction	0
ASSESSED VALUE	2,164,133
TOTAL EXEMPTION VALUE	0
BASE TAXABLE VALUE	2,164,133
TOTAL JUST VALUE	2,164,133
NCON VALUE	0
INCOME VALUE	
PREVIOUS YEAR MKT VALUE	2,071,192

PERMIT NUM	DESCRIPTION	AMT	ISSUED
20000212	REMODEL	72,000	01/08/2020

SALES DATA

OFF RECORD Number	DATE	TYPE INST	Q / U	V / I	RSN CD	SALE PRICE
2447/1888	3/31/2021	WD	Q	I	01	2,000,000
GRANTOR: LAND TRUST #4022						
GRANTEE: FIRST AMERICAN BEAC						
2190/0570	4/13/2018	WD	U	I	37	304,000
GRANTOR: JAMES JACK JR						
GRANTEE: LAND TRUST #4022						

BUILDING NOTES

BUILDING DIMENSIONS

FGR=[YR=1993] W1 FOP=[YR=1993] N8 W29 S14 E6 N6 E23$ W23 S16 APT=[YR=1993] S6 STR=[YR=1993] W3 S12 E3 N12$ S16 E24 N20 W12 N2 W12$ E12 S2 E12 N18 $ PTR=E15 STR=[YR=1993] E10 S3 W6 S6 FUS=[YR=1993] E25 S8 E1 S45W4 FOP=[YR=2020] S10 W15 N10 E15$W20 N39 W6 N14 E4$ W4 N9$ W15$ PTR= N30 FUS=[YR=2020] N13 W4 N16 E4 N16BAL=[YR=2020] N10 E15 S10 W15 $ E15 S16 E5 S16 W5 S13 W15 $ S30 $.

EXTRA FEATURES

LN	OB/XF CODE	DESCRIPTION	BLD	CAP	L	W	UNITS	UT	Adj R	ADJ UNIT PRICE	ORIG COND	YEAR ON	YEAR ACTUAL	Q	% COND	OB/XF MKT VALUE	NOTES
2	1242	WD DECK A	0	0	0	0	192.00	SF	10.00	10.00	100	2020	2020	3	82	1,574	

LAND DESCRIPTION

TOTAL OB/XF 1,574

LN	USE CODE	CLS	LAND USE DESCRIPTION	CAP	RD	LOC ZONE	FRONT	DEPTH	TOT LND UTS	UNIT TYPE	DT	DPTH FACT	% COND	TOT ADJ	UNIT PRICE	ADJ UNIT PRICE	LAND VALUE	OTHER ADJUSTMENTS AND NOTES	YEAR	DENSITY	DECL	FRZ	YR	CONSRV
1	000120	C	RES OCEAN	0		RSF-2	50.00	100.00	50.00	FF		1.00	1.00	1.00	25,000.00	25,000.00	1,250,000							

REVIEW DATE 01/01/2023 BY CD Total Acres: 0.00 Total Land Value: 1,250,000 Market: 0 Agricultural: 0 Common: 1,250,000 PRINTED 07/09/2026 BY SYS