BLOCK 1 LOT 6
OR 800 PG 1518
AMERICAN BEACH SUB #1 PB 2/42

WALKER VIOLA CATHERINE
P O BOX 17076
FERNANDINA BEACH, FL 32035

2026

00-00-30-010A-0001-0060

BUILDING CHARACTERISTICS

ELEMENT	CD	CONSTRUCTION
Exterior Wall	16	WD FR STUC 100
Roof Structur	03	GABLE/HIP 100
Roof Cover	12	MODULAR MT 100
Interior Wall	05	DRYWALL 100
Interior Floo	11	CLAY TILE 100
Air Condition	03	CENTRAL 100
Heating Type	04	AIR DUCTED 100
Bedrooms		2 100
Bathrooms		2 100
Frame	02	WOOD FRAME 100
Stories	2.	2. 100
Units		0 100
Occupancy	00	NONE 100
Quality	03	Quality Level 03

DOR CODE 0100 SINGLE FAMILY
MAP NUM | MKT AREA 03
NEIGHBORHOOD/LOC 3038.00

AREA TYPE	TOTAL GROSS AREA	PCT OF BASE	YEAR	TOT ADJ AREA	SUBAREA MARKET VALUE
BAS	856	100	2002	856	96,665
DCK	60	10	2002	6	678
FCP	640	25	2002	160	18,068
FOP	55	30	2002	16	1,807
FOP	100	30	2002	30	3,388
FOP	360	30	2002	108	12,196
FST	176	55	2002	97	10,954
FUS	622	100	2002	622	70,240
UOP	30	20	2002	6	678
TOTALS	2,899			1,901	214,673

MARKET ADJUSTMENTS

TYPE	MDL	EFF. AREA	TOT ADJ PTS	EFF. BASE RATE	REPL. COST NEW	AYB	EYB	ECON	FNCT		NORM	% COND
0100	01	1,901	121.5200	127.60	242,568	2002	2002	0	0	0	11.50	88.50

1 SINGLE FAM 100% - 2004 Heated Area: 1478 HX Base Yr 2004

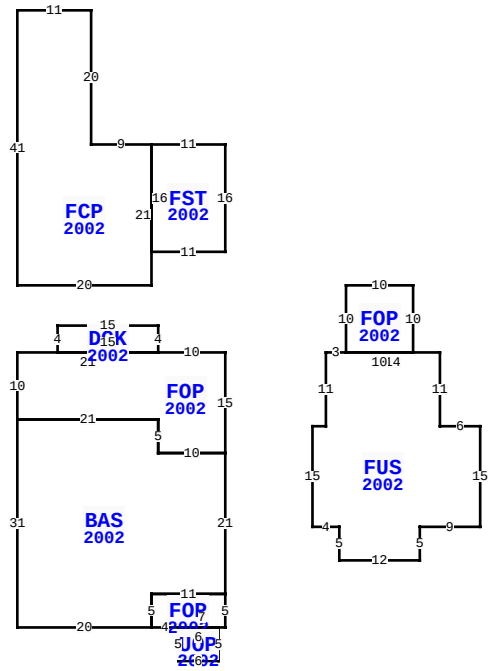

5430 GREGG ST, FERNANDINA BEACH

BLD DATE		LGL DATE	
XF DATE		LAND DATE	05/05/2026 MLU
INC DATE		AG DATE	

NASSAU COUNTY PROPERTY

PAGE 1 of 1 8

VALUATION SUMMARY

VALUATION BY		STANDARD
Tax Group: 8	Tax Dist:	
BUILDING MARKET VALUE		214,673
TOTAL MARKET OB/XF VALUE		3,912
TOTAL LAND VALUE - MARKET		1,250,000
TOTAL MARKET VALUE		1,468,585
SOH/AGL Deduction		1,069,236
ASSESSED VALUE		399,349
TOTAL EXEMPTION VALUE	HX HB WX	56,411
BASE TAXABLE VALUE		342,938
TOTAL JUST VALUE		1,468,585
NCON VALUE		0
INCOME VALUE		
PREVIOUS YEAR MKT VALUE		1,108,922

PERMIT NUM	DESCRIPTION	AMT	ISSUED
B0109129	NEW CONSTR	180,000	12/01/2001
7234	MH MOVE-ON	25,000	04/21/1988
2022	N/A	4,400	01/20/1987

SALES DATA

OFF RECORD Number	DATE	TYPE INST	Q U	V I	RSN CD	SALE PRICE
0800/1518	7/23/1997	WD	Q	I		84,000
GRANTOR: INTERCOASTAL MTGE CO						
GRANTEE: WALKER VIOLA CATHER						
0651/1072	3/16/1992	CT	U	I	14	11,000
GRANTOR: SIMMONS & BODIE						
GRANTEE: INTERCOASTAL MTG CO						

BUILDING NOTES

BUILDING DIMENSIONS

FOP=[YR=2002] W10 DCK=[YR=2002] N4 W15 S4 E15 $ W21 S10 BAS=[YR=2002] S31 E20 FOP=[YR=2002] E4 UOP=[YR=2002] S5 E6 N5 W6 $ E7 N5 W11 S5 $ N5 E11 N21 W10 N5 W21 $ E21 S5 E10 N15 $ PTR= E15 FUS=[YR=2002] E3 FOP=[YR=2002] N10 E10 S10 W10 $ E14 S11 E6 S15 W9 S5 W12 N5 W4 N15 E2 N11 $ W15 $ PTR= N15 FST=[YR=2002] N16 W11 FCP=[YR=2002] W9 N20 W11 S41 E20 N21$ S16 E11 $ S15$.

EXTRA FEATURES

LN	OB/XF CODE	DESCRIPTION	BLD	CAP	L	W	UNITS	UT	Adj R	ADJ UNIT PRICE	ORIG COND	YEAR ON	YEAR ACTUAL	Q	% COND	OB/XF MKT VALUE	NOTES
1	0416	DUNEWALKS	0	100	163	4	652.00	SF	30.00	30.00	100	2002	2002	3	20	3,912	

LAND DESCRIPTION

TOTAL OB/XF 3,912

LN	USE CODE	CLS	LAND USE DESCRIPTION	CAP	RD	LOC ZONE	FRONT	DEPTH	TOT LND UTS	UNIT TYPE	DT	DPTH FACT	% COND	TOT ADJ	UNIT PRICE	ADJ UNIT PRICE	LAND VALUE	OTHER ADJUSTMENTS AND NOTES	YEAR	DENSITY	DECL	FRZ	YR	CONSRV
1	000120	C	RES OCEAN	100		RSF-2	50.00	100.00	50.00	FF		1.00	1.00	1.00	25,000.00	25,000.00	1,250,000							

REVIEW DATE 01/11/2024 BY KBA Total Acres: 0.00 Total Land Value: 1,250,000 Market: 0 Agricultural: 0 Common: 1,250,000 PRINTED 07/09/2026 BY SYS