IN OR 2241/128

FOSS JANICE
76235 TOM BURNEY RD
YULEE, FL 32097

2025

55-3N-27-0000-0004-0070

BUILDING CHARACTERISTICS

ELEMENT	CD	CONSTRUCTION
Exterior Wall	05	AVERAGE 100
Roof Structur	03	GABLE/HIP 100
Roof Cover	03	COMP SHNGL 100
Interior Wall	05	DRYWALL 100
Interior Floo	12	HARDWOOD 60
Interior Floo	14	CARPET 40
Air Condition	03	CENTRAL 100
Heating Type	04	AIR DUCTED 100
Bedrooms		5 100
Bathrooms		2 100
Frame	02	WOOD FRAME 100
Stories	2.	2. 100
Units		0 100
Occupancy	00	NONE 100
Quality	04	Quality Level 04
DOR CODE	0100	SINGLE FAMILY
MAP NUM		MKT AREA 04
NEIGHBORHOOD/LOC	4053.00	

AREA TYPE	TOTAL GROSS AREA	PCT OF BASE	YEAR	TOT ADJ AREA	SUBAREA MARKET VALUE
BAS	1,523	100	1993	1,523	134,639
FOP	190	30	1993	57	5,039
FUS	1,064	100	1993	1,064	94,062
PTO	499	5	2012	25	2,211
UGR	520	45	1993	234	20,686
TOTALS	3,796			2,903	256,637

MARKET ADJUSTMENTS

TYPE	MDL	EFF. AREA	TOT ADJ PTS	EFF. BASE RATE	REPL. COST NEW	AYB	EYB	ECON	FNCT		NORM	% COND
0100	01	2,903	104.6220	104.62	303,712	1991	1991	0	0	0	15.50	84.50

1 SINGLE FAM – 100% - 2020 Heated Area: 2587 HX Base Yr 2020

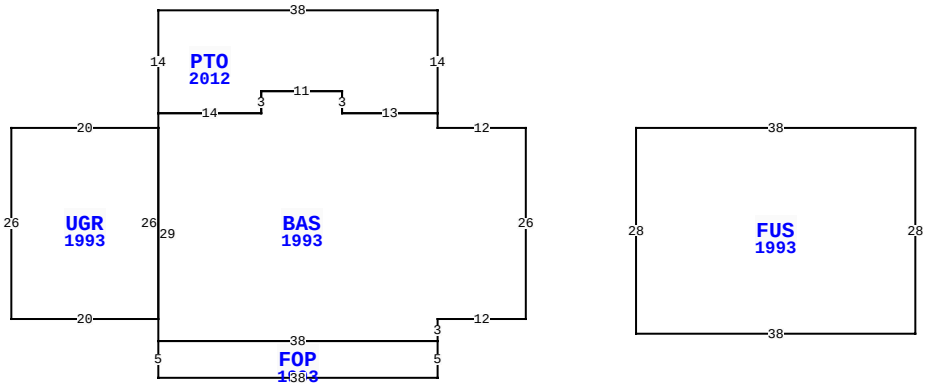

76235 TOM BURNEY RD, YULEE

BLD DATE		LGL DATE	
XF DATE		LAND DATE	05/08/2025 MLU
INC DATE		AG DATE	

NASSAU COUNTY PROPERTY

PAGE 1 of 1 4

VALUATION SUMMARY

VALUATION BY		STANDARD
Tax Group: 4	Tax Dist:	
BUILDING MARKET VALUE		256,637
TOTAL MARKET OB/XF VALUE		32,504
TOTAL LAND VALUE - MARKET		85,000
TOTAL MARKET VALUE		374,141
SOH/AGL Deduction		113,387
ASSESSED VALUE		260,754
TOTAL EXEMPTION VALUE	HX HB	50,722
BASE TAXABLE VALUE		210,032
TOTAL JUST VALUE		374,141
NCON VALUE		0
INCOME VALUE		
PREVIOUS YEAR MKT VALUE		357,741

PERMIT NUM	DESCRIPTION	AMT	ISSUED
B26690	XFOB	2,400	12/01/2012
6572	SWIM POOL	14,260	06/28/1990
6371	NEW CONSTR	79,311	03/26/1990

SALES DATA

OFF RECORD Number	DATE	TYPE INST	Q U	V I	RSN CD	SALE PRICE
2241/0128	11/29/2018	WD	Q	I	01	320,000
GRANTOR: MALEY PATRICK A & KAT						
GRANTEE: FOSS JANICE						
0803/1856	8/21/1997	WD	Q	I		155,000
GRANTOR: FOSS JANICE E & ALLAN						
GRANTEE: MALEY PATRICK A & K						

BUILDING NOTES

BUILDING DIMENSIONS

BAS=[YR=1993] W12 N2 PTO=[YR=2012] N14 W38 S14 E14 N3 E11 S3 E13$ W13 N3 W11 S3 W14 S2 UGR=[YR=1993] W20 S26 E20 N26$ S29 FOP=[YR=1993] S5 E38 N5 W38 $ E38 N3 E12 N26 $ PTR= E15 FUS=[YR=1993] E38 S28 W38 N28 $ W15 $.

EXTRA FEATURES

LN	OB/XF CODE	DESCRIPTION	BLD	CAP	L	W	UNITS	UT	Adj R	ADJ UNIT PRICE	ORIG COND	YEAR ON	YEAR ACTUAL	Q	% COND	OB/XF MKT VALUE	NOTES
1	0845	KOOL DECK	0	100	0	0	673.00	SF	7.25	7.25	100	1991	1991	3	59.5	2,903	
2	0861	POOL GUNIT	0	100	18	36	648.00	SF	85.00	85.00	100	1991	1991	3	20	11,016	
3	0812	CONCRETE C	0	100	0	0	4,088.00	SF	4.00	4.00	100	1995	1995	3	68	11,119	
4	0510	GARAGE WD-	0	100	30	24	720.00	SF	35.00	35.00	100	2000	2000	3	27	6,804	
5	0855	CONC PAVER	0	100	0	0	72.00	SF	10.00	10.00	100	2012	2012	3	92	662	

LAND DESCRIPTION

TOTAL OB/XF 32,504

LN	USE CODE	CLS	LAND USE DESCRIPTION	CAP	RD	LOC ZONE	FRONT	DEPTH	TOT LND UTS	UNIT TYPE	DT	DPTH FACT	% COND	TOT ADJ	UNIT PRICE	ADJ UNIT PRICE	LAND VALUE	OTHER ADJUSTMENTS AND NOTES	YEAR	DENSITY	DECL	FRZ	YR	CONSRV
1	000100	C	RES	100		OR	0.00	0.00	1.00	AC		1.00	1.00	1.00	85,000.00	85,000.00	85,000							

REVIEW DATE 02/01/2024 BY KBA Total Acres: 1.00 Total Land Value: 85,000 Market: 0 Agricultural: 0 Common: 85,000 PRINTED 07/30/2025 BY SYS