LOT 72
IN OR 2060/1717
PAGE HILL #3 PB 6/341

AMERICAN HOMES 4 RENT PROPERTIES SEVEN LLC
ATTN:PROPERTY TAX DEPARTMENT, 23975 PARK SORRENTO, SUITE 3
CALABASAS, CA 91302

2025

51-3N-27-1627-0072-0000

NASSAU COUNTY PROPERTY

BUILDING CHARACTERISTICS

ELEMENT	CD	CONSTRUCTION
Exterior Wall	05	AVERAGE 70
Exterior Wall	20	FACE BRICK 30
Roof Structur	03	GABLE/HIP 100
Roof Cover	03	COMP SHNGL 100
Interior Wall	05	DRYWALL 100
Interior Floo	14	CARPET 80
Interior Floo	08	SHT VINYL 20
Air Condition	03	CENTRAL 100
Heating Type	04	AIR DUCTED 100
Bedrooms		4 100
Bathrooms		2 100
Frame	02	WOOD FRAME 100
Stories	1.	1. 100
Units		0 100
Occupancy	00	NONE 100
Quality	05	Quality Level 05
DOR CODE	0100	SINGLE FAMILY
MAP NUM		MKT AREA 04
NEIGHBORHOOD/LOC	4039.00	

AREA TYPE	TOTAL GROSS AREA	PCT OF BASE	YEAR	TOT ADJ AREA	SUBAREA MARKET VALUE
BAS	1,376	100	2005	1,376	183,377
FGR	410	55	2005	226	30,118
FOP	12	30	2005	4	533
PTO	160	5	2005	8	1,067
TOTALS	1,958			1,614	215,094

MARKET ADJUSTMENTS

TYPE	MDL	EFF. AREA	TOT ADJ PTS	EFF. BASE RATE	REPL. COST NEW	AYB	EYB	ECON	FNCT		NORM	% COND
0100	01	1,614	124.4298	149.32	241,002	2005	2005	0	0	0	10.75	89.25

1 SINGLE FAM – 0% - 0 Heated Area: 1376 HX Base Yr

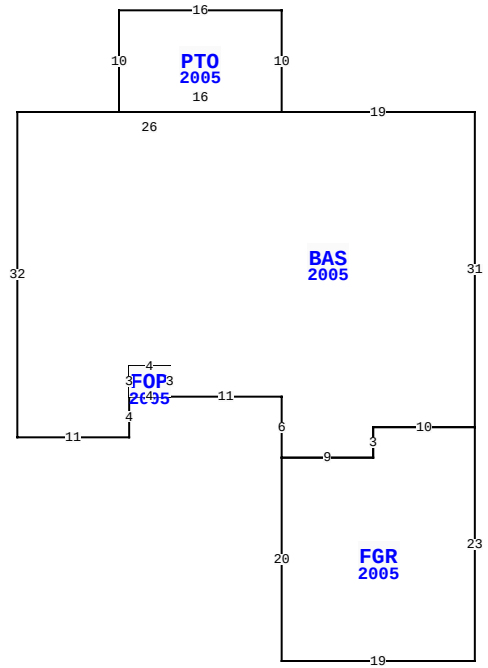

861110 WORTHINGTON DR, YULEE

BLD DATE		LGL DATE	
XF DATE		LAND DATE	04/22/2025 MLU
INC DATE		AG DATE	

EXTRA FEATURES

LN	OB/XF CODE	DESCRIPTION	BLD	CAP	L	W	UNITS	UT	Adj R	ADJ UNIT PRICE	ORIG COND	YEAR ON	YEAR ACTUAL	Q	% COND	OB/XF MKT VALUE	NOTES
1	0500	FP-PRE FAB	0	0	0	0	1.00	UT	4,200.00	4,200.00	100	2005	2005	3	88	3,696	
2	0812	CONCRETE C	0	0	0	0	1,279.00	SF	4.80	4.80	100	2005	2005	3	84	5,157	

VALUATION SUMMARY

VALUATION BY	STANDARD
Tax Group: 4	Tax Dist:
BUILDING MARKET VALUE	215,094
TOTAL MARKET OB/XF VALUE	8,853
TOTAL LAND VALUE - MARKET	85,000
TOTAL MARKET VALUE	308,947
SOH/AGL Deduction	48,684
ASSESSED VALUE	260,263
TOTAL EXEMPTION VALUE	0
BASE TAXABLE VALUE	260,263
TOTAL JUST VALUE	308,947
NCON VALUE	0
INCOME VALUE	
PREVIOUS YEAR MKT VALUE	295,069

PERMIT NUM	DESCRIPTION	AMT	ISSUED
M0509835	H/AC	0	06/01/2005
E0514891	ELEC OTHER	1,400	05/01/2005
P09329	OTHER	0	04/01/2005
R07498	REPAIR/RRF	1,500	04/01/2005
B15047	NEW CONSTR	146,645	04/01/2005

SALES DATA

OFF RECORD Number	DATE	TYPE INST	Q / U	V / I	RSN CD	SALE PRICE
2060/1717	7/25/2016	CT	U	I	18	112,300
GRANTOR: CLERK OF COURT						
GRANTEE: AMERICAN HOMES 4 RE						
1349/1280	9/13/2005	WD	Q	I		146,700
GRANTOR: RICHMOND AMERICAN HOM						
GRANTEE: ROGERS JESSE M & AS						

BUILDING NOTES

BUILDING DIMENSIONS

BAS=[YR=2005] W19 PTO=[YR=2005] N10 W16 S10 E16$ W26 S32 E11 N4 FOP=[YR=2005] E4 N3 W4 S3$ N3 E4 S3 E11 S6 FGR=[YR=2005] S20 E19 N23 W10 S3 W9$ E9 N3 E10 N31$.

LAND DESCRIPTION

TOTAL OB/XF 8,853

LN	USE CODE	CLS	LAND USE DESCRIPTION	CAP	RD	LOC ZONE	FRONT	DEPTH	TOT LND UTS	UNIT TYPE	DT	DPTH FACT	% COND	TOT ADJ	UNIT PRICE	ADJ UNIT PRICE	LAND VALUE	OTHER ADJUSTMENTS AND NOTES	YEAR	DENSITY	DECL	FRZ	YR	CONSRV
1	000100	C	RES	0		RSF-1	0.00	0.00	1.00	LT		1.00	1.00	1.00	85,000.00	85,000.00	85,000							

REVIEW DATE 05/12/2019 BY KBA Total Acres: 0.00 Total Land Value: 85,000 Market: 0 Agricultural: 0 Common: 85,000 PRINTED 07/30/2025 BY SYS