LOT 39
PAGE HILL #3 PB 6/341

AYARS BONNIE LEE L/E/
86905 WORTHINGTON DR
YULEE, FL 32097

2025

51-3N-27-1627-0039-0000

BUILDING CHARACTERISTICS

ELEMENT	CD	CONSTRUCTION
Exterior Wall	30	VINYL 70
Exterior Wall	20	FACE BRICK 30
Roof Structur	03	GABLE/HIP 100
Roof Cover	03	COMP SHNGL 100
Interior Wall	05	DRYWALL 100
Interior Floo	14	CARPET 80
Interior Floo	08	SHT VINYL 20
Air Condition	03	CENTRAL 100
Heating Type	04	AIR DUCTED 100
Bedrooms		4 100
Bathrooms		2 100
Frame	02	WOOD FRAME 100
Stories	1.	1. 100
Units		0 100
Occupancy	00	NONE 100
Quality	05	Quality Level 05
DOR CODE	0100	SINGLE FAMILY
MAP NUM		MKT AREA 04
NEIGHBORHOOD/LOC	4039.00	

AREA TYPE	TOTAL GROSS AREA	PCT OF BASE	YEAR	TOT ADJ AREA	SUBAREA MARKET VALUE
BAS	1,684	100	2005	1,684	214,068
FGR	413	55	2005	227	28,856
FOP	6	30	2005	2	254
USP	168	30	2022	50	6,356
TOTALS	2,271			1,963	249,534

MARKET ADJUSTMENTS

TYPE	MDL	EFF. AREA	TOT ADJ PTS	EFF. BASE RATE	REPL. COST NEW	AYB	EYB	ECON	FNCT		NORM	% COND
0100	01	1,963	118.6900	142.43	279,590	2005	2005	0	0	0	10.75	89.25

1 SINGLE FAM – 0% - 0 Heated Area: 1684 HX Base Yr

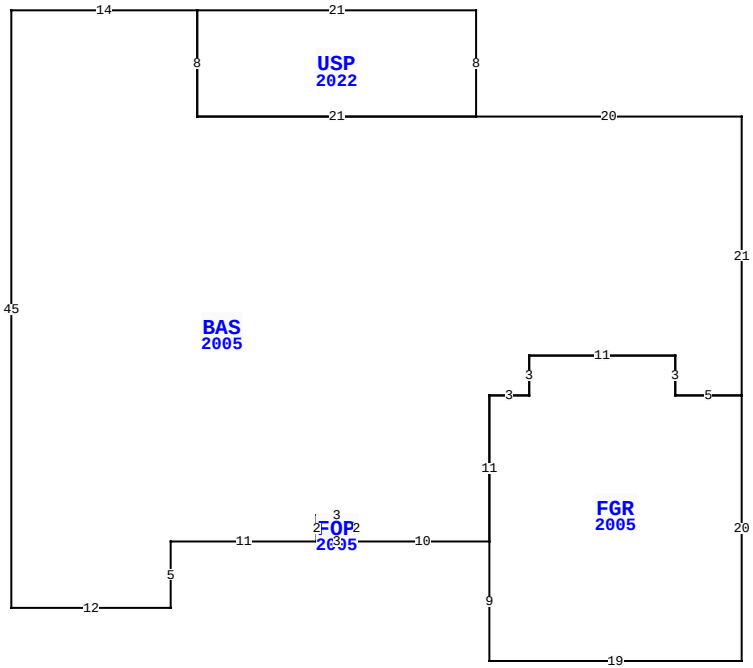

861501 WORTHINGTON DR, YULEE

BLD DATE		LGL DATE	
XF DATE		LAND DATE	04/22/2025 MLU
INC DATE		AG DATE	

NASSAU COUNTY PROPERTY

PAGE 1 of 1 4

VALUATION SUMMARY

VALUATION BY	STANDARD
Tax Group: 4	Tax Dist:
BUILDING MARKET VALUE	249,534
TOTAL MARKET OB/XF VALUE	3,696
TOTAL LAND VALUE - MARKET	85,000
TOTAL MARKET VALUE	338,230
SOH/AGL Deduction	49,405
ASSESSED VALUE	288,825
TOTAL EXEMPTION VALUE	0
BASE TAXABLE VALUE	288,825
TOTAL JUST VALUE	338,230
NCON VALUE	0
INCOME VALUE	
PREVIOUS YEAR MKT VALUE	322,791

PERMIT NUM	DESCRIPTION	AMT	ISSUED
E15284	ELEC OTHER	1,600	07/01/2005
M10048	MECH OTHER	0	07/01/2005
P0509492	OTHER	0	05/01/2005
R07499	REPAIR/RRF	1,500	04/01/2005
B15040	NEW CONSTR	164,040	04/01/2005
P09228	OTHER	0	03/01/2005

SALES DATA

OFF RECORD Number	DATE	TYPE INST	Q / U	V / I	RSN CD	SALE PRICE
2644/1590	5/31/2023	LE	U	I	11	100
GRANTOR: AYARS BONNIE LEE						
GRANTEE: WALRATH JASON						
1771/1732	12/29/2011	WD	U	I	40	133,000
GRANTOR: WILSON ANTHONY M & KA						
GRANTEE: AYARS CARL E & BONN						

BUILDING NOTES

BUILDING DIMENSIONS

BAS=[YR=2005] W20 USP=[YR=2022] N8 W21 S8 E21$ W21 N8 W14 S45 E12 N5 E11 FOP=[YR=2005] E3 N2 W3 S2$ N2 E3 S2 E10 FGR=[YR=2005] S9E19 N20 W5 N3 W11 S3 W3 S11$ N11 E3 N3 E11 S3 E5 N21$.

EXTRA FEATURES

LN	OB/XF CODE	DESCRIPTION	BLD	CAP	L	W	UNITS	UT	Adj R	ADJ UNIT PRICE	ORIG COND	YEAR ON	YEAR ACTUAL	Q	% COND	OB/XF MKT VALUE	NOTES
1	0500	FP-PRE FAB	0	0	0	0	1.00	UT	4,200.00	4,200.00	100	2005	2005	3	88	3,696	

LAND DESCRIPTION

TOTAL OB/XF 3,696

LN	USE CODE	CLS	LAND USE DESCRIPTION	CAP	RD	LOC ZONE	FRONT	DEPTH	TOT LND UTS	UNIT TYPE	DT	DPTH FACT	% COND	TOT ADJ	UNIT PRICE	ADJ UNIT PRICE	LAND VALUE	OTHER ADJUSTMENTS AND NOTES	YEAR	DENSITY	DECL	FRZ	YR	CONSRV
1	000100	C	RES	0		RSF-1	0.00	0.00	1.00	LT		1.00	1.00	1.00	85,000.00	85,000.00	85,000							

REVIEW DATE 08/30/2022 BY NWA Total Acres: 0.00 Total Land Value: 85,000 Market: 0 Agricultural: 0 Common: 85,000 PRINTED 07/30/2025 BY SYS