LOT 7
IN OR 1577/446
PAGE HILL #1 PB 6/237

TURMELLE JASON W & LIGAYA
86137 WORTHINGTON DRIVE
YULEE, FL 32097-3491

2025

51-3N-27-1625-0007-0000

BUILDING CHARACTERISTICS

ELEMENT	CD	CONSTRUCTION
Exterior Wall	30	VINYL 70
Exterior Wall	16	WD FR STUC 30
Roof Structur	03	GABLE/HIP 100
Roof Cover	03	COMP SHNGL 100
Interior Wall	05	DRYWALL 100
Interior Floo	14	CARPET 60
Interior Floo	13	LVT/LAMNT 40
Air Condition	03	CENTRAL 100
Heating Type	04	AIR DUCTED 100
Bedrooms		3 100
Bathrooms		2 100
Frame	02	WOOD FRAME 100
Stories	1.	1. 100
Units		0 100
Occupancy	00	NONE 100
Quality	05	Quality Level 05
DOR CODE	0100	SINGLE FAMILY
MAP NUM		MKT AREA 04
NEIGHBORHOOD/LOC	4039.00	

AREA TYPE	TOTAL GROSS AREA	PCT OF BASE	YEAR	TOT ADJ AREA	SUBAREA MARKET VALUE
BAS	1,566	100	2002	1,566	196,348
FGR	440	55	2002	242	30,343
FOP	51	30	2002	15	1,881
FSP	170	40	2009	68	8,526
USP	180	30	2003	54	6,771
TOTALS	2,407			1,945	243,867

MARKET ADJUSTMENTS

TYPE	MDL	EFF. AREA	TOT ADJ PTS	EFF. BASE RATE	REPL. COST NEW	AYB	EYB	ECON	FNCT		NORM	% COND
0100	01	1,945	117.1786	140.61	273,486	2002	2002	0	0	0	10.83	89.17

1 SINGLE FAM – 100% - 2009 Heated Area: 1566 HX Base Yr 2009

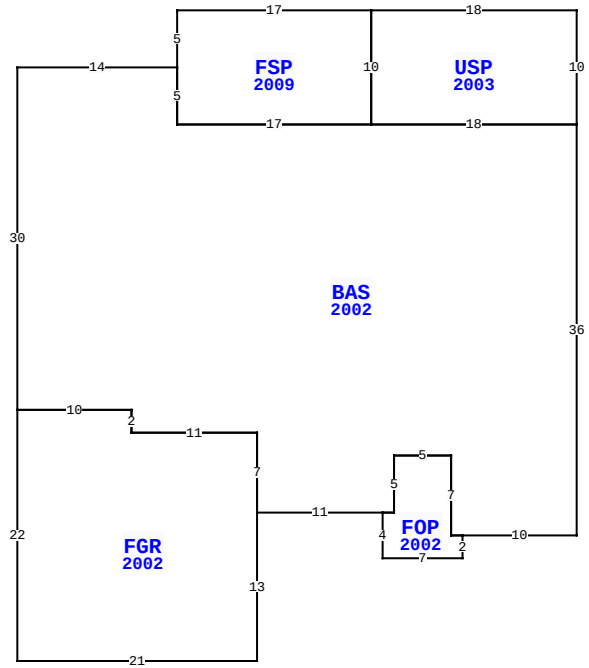

86137 WORTHINGTON DR, YULEE

BLD DATE		LGL DATE	
XF DATE		LAND DATE	04/22/2025 MLU
INC DATE		AG DATE	

NASSAU COUNTY PROPERTY

PAGE 1 of 1 4

VALUATION SUMMARY

VALUATION BY		STANDARD
Tax Group: 4	Tax Dist:	
BUILDING MARKET VALUE		243,867
TOTAL MARKET OB/XF VALUE		25,110
TOTAL LAND VALUE - MARKET		85,000
TOTAL MARKET VALUE		353,977
SOH/AGL Deduction		185,481
ASSESSED VALUE		168,496
TOTAL EXEMPTION VALUE	HX HB DV	60,722
BASE TAXABLE VALUE		107,774
TOTAL JUST VALUE		353,977
NCON VALUE		0
INCOME VALUE		
PREVIOUS YEAR MKT VALUE		340,616

PERMIT NUM	DESCRIPTION	AMT	ISSUED
B240008056	DEMO OF POOL + FI	4,500	07/09/2024
B23110	ADDITION	20,829	12/01/2009
E22279	ELEC OTHER	0	12/01/2009
B0310779	SWIM POOL	25,500	01/01/2003
B0210050	NEW CONSTR	120,231	08/01/2002
R024329	NEW CONSTR	2,000	08/01/2002

SALES DATA

OFF RECORD Number	DATE	TYPE INST	Q / U	V / I	RSN CD	SALE PRICE
1577/0446	7/17/2008	WD	Q	I		187,500
GRANTOR: DOYLE MARY ANN						
GRANTEE: TURMELLE JASON W &						
1300/0030	3/07/2005	QC	Q	I	01	100
GRANTOR: DOYLE WILLIAM HARRY &						
GRANTEE: DOYLE MARY ANN						

BUILDING NOTES

EXTRA FEATURES

LN	OB/XF CODE	DESCRIPTION	BLD	CAP	L	W	UNITS	UT	Adj R	ADJ UNIT PRICE	ORIG COND	YEAR ON	YEAR ACTUAL	Q	% COND	OB/XF MKT VALUE	NOTES
1	0500	FP-PRE FAB	0	100	0	0	1.00	UT	4,200.00	4,200.00	100	2002	2002	3	85	3,570	
2	0812	CONCRETE C	0	100	0	0	1,297.00	SF	4.80	4.80	100	2002	2002	3	80	4,980	
5	0476	VF 6 SBPL	0	100	0	0	450.00	LF	38.40	38.40	100	2025	2018		92	15,898	
6	0470	VNYL GATE	0	100	0	0	2.00	UT	360.00	360.00	100	2025	2018		92	662	

BUILDING DIMENSIONS

BAS=[YR=2002;ORIG=-35,5] W14 S30 E10 S2 E11 S7 E11 E1 N5 E5 S7 E1 E10 N36 W18 W17 N5 $
FGR=[YR=2002;ORIG=-49,35] S22 E21 N13 N7 W11 N2 W10 $
USP=[YR=2003;ORIG=0,0] W18 S10 E18 N10 $
FSP=[YR=2009;ORIG=-18,0] W17 S5 S5 E17 N10 $
FOP=[YR=2002;ORIG=-17,44] S4 E7 N2 W1 N7 W5 S5 W1 $
.

LAND DESCRIPTION

TOTAL OB/XF 25,110

LN	USE CODE	CLS	LAND USE DESCRIPTION	CAP	RD	LOC ZONE	FRONT	DEPTH	TOT LND UTS	UNIT TYPE	DT	DPTH FACT	% COND	TOT ADJ	UNIT PRICE	ADJ UNIT PRICE	LAND VALUE	OTHER ADJUSTMENTS AND NOTES	YEAR	DENSITY	DECL	FRZ	YR	CONSRV
1	000100	C	RES	100	0003	RSF-1	0.00	0.00	1.00	LT		1.00	1.00	1.00	85,000.00	85,000.00	85,000							

REVIEW DATE 12/06/2024 BY KWX Total Acres: 0.00 Total Land Value: 85,000 Market: 0 Agricultural: 0 Common: 85,000 PRINTED 07/30/2025 BY SYS