LOTS 7 & 8
IN OR 1871/1221
EZELL ACRES PB 5/326

WILLIAMS DEBORAH J
86205 PAGES DAIRY RD
YULEE, FL 32097

2025

51-3N-27-0497-0007-0000

NASSAU COUNTY PROPERTY

BUILDING CHARACTERISTICS

ELEMENT	CD	CONSTRUCTION
Exterior Wall	05	AVERAGE 50
Exterior Wall	12	CEDAR 50
Roof Structur	08	IRREGULAR 100
Roof Cover	12	MODULAR MT 100
Interior Wall	06	CUST PANEL 90
Interior Wall	05	DRYWALL 10
Interior Floo	12	HARDWOOD 80
Interior Floo	15	HARDTILE 20
Air Condition	03	CENTRAL 100
Heating Type	04	AIR DUCTED 100
Bedrooms		3 100
Bathrooms		2.5 100
Frame	02	WOOD FRAME 100
Stories	2.	2. 100
Units		0 100
Occupancy	00	NONE 100
Quality	05	Quality Level 05
DOR CODE	0100	SINGLE FAMILY
MAP NUM		MKT AREA 04
NEIGHBORHOOD/LOC	4053.00	

AREA TYPE	TOTAL GROSS AREA	PCT OF BASE	YEAR	TOT ADJ AREA	SUBAREA MARKET VALUE
BAS	1,716	100	2005	1,716	191,674
FOP	880	30	2005	264	29,489
FUS	1,664	100	2005	1,664	185,866
UOP	64	20	2005	13	1,452
TOTALS	4,324			3,657	408,481

MARKET ADJUSTMENTS

TYPE	MDL	EFF. AREA	TOT ADJ PTS	EFF. BASE RATE	REPL. COST NEW	AYB	EYB	ECON	FNCT		NORM	% COND
0100	01	3,657	123.2550	123.26	450,762	2005	2005	0	0	0	9.38	90.62

1 SINGLE FAM – 100% - 2014 Heated Area: 3380 HX Base Yr 2014

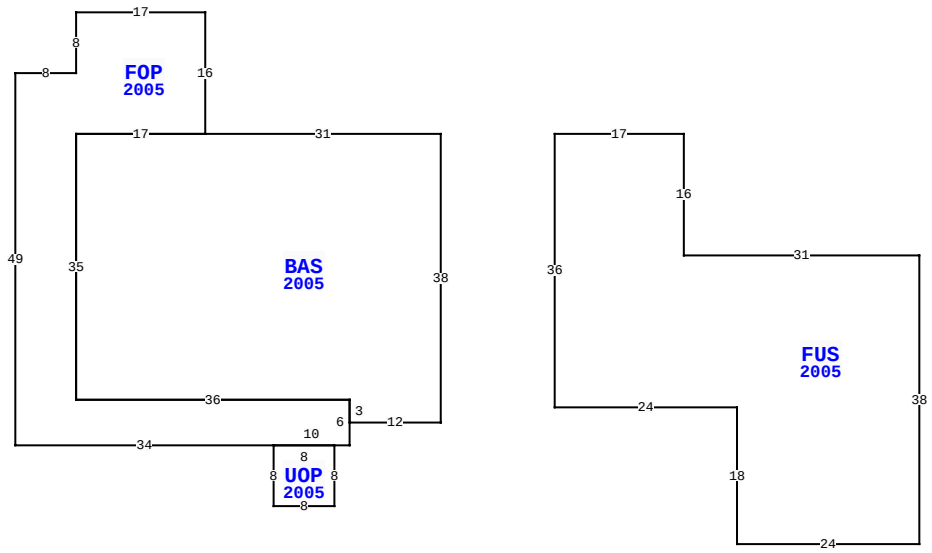

86205 PAGES DAIRY RD, YULEE

BLD DATE		LGL DATE	
XF DATE		LAND DATE	05/08/2025 MLU
INC DATE		AG DATE	

VALUATION SUMMARY

VALUATION BY		STANDARD
Tax Group: 4	Tax Dist:	
BUILDING MARKET VALUE		408,481
TOTAL MARKET OB/XF VALUE		4,053
TOTAL LAND VALUE - MARKET		223,125
TOTAL MARKET VALUE		635,659
SOH/AGL Deduction		311,103
ASSESSED VALUE		324,556
TOTAL EXEMPTION VALUE	HX HB	50,722
BASE TAXABLE VALUE		273,834
TOTAL JUST VALUE		635,659
NCON VALUE		0
INCOME VALUE		
PREVIOUS YEAR MKT VALUE		604,859

PERMIT NUM	DESCRIPTION	AMT	ISSUED
21004574	SOLAR PANEL	43,305	06/09/2021
B0310985	NEW CONSTR	216,574	04/01/2003

SALES DATA

OFF RECORD Number	DATE	TYPE INST	Q / U	V / I	RSN CD	SALE PRICE
1871/1221	7/30/2013	WD	U	I	38	290,000
GRANTOR: WILLIAMS RICKY J & DE						
GRANTEE: WILLIAMS DEBORAH J						
0994/1519	6/28/2001	WD	Q	V		45,000
GRANTOR: EZELL INVESTMENT CO						
GRANTEE: WILLIAMS RICKY J &						

BUILDING NOTES

BUILDING DIMENSIONS

BAS=[YR=2005] W31 FOP=[YR=2005] N16 W17 S8 W8 S49 E34 UOP=[YR=2005] S8 E8 N8 W8 $ E10 N6 W36 N35 E17$ W17 S35 E36 S3 E12 N38$ PTR=E15 FUS=[YR=2005] E17 S16 E31 S38 W24 N18 W24 N36$ W15$.

EXTRA FEATURES

LN	OB/XF CODE	DESCRIPTION	BLD	CAP	L	W	UNITS	UT	Adj R	ADJ UNIT PRICE	ORIG COND	YEAR ON	YEAR ACTUAL	Q	% COND	OB/XF MKT VALUE	NOTES
1	0810	CONCRETE A	0	100	30	14	420.00	SF	6.50	6.50	100	2005	2005	3	84	2,293	
2	0504	FP-ELECTRI	0	100	0	0	1.00	UT	2,000.00	2,000.00	100	2005	2005	3	88	1,760	

LAND DESCRIPTION

TOTAL OB/XF 4,053

LN	USE CODE	CLS	LAND USE DESCRIPTION	CAP	RD	LOC ZONE	FRONT	DEPTH	TOT LND UTS	UNIT TYPE	DT	DPTH FACT	% COND	TOT ADJ	UNIT PRICE	ADJ UNIT PRICE	LAND VALUE	OTHER ADJUSTMENTS AND NOTES	YEAR	DENSITY	DECL	FRZ	YR	CONSRV
1	000100	C	RES	100		OR	0.00	0.00	2.73	AC		1.00	1.00	0.50	85,000.00	42,500.00	116,025							
2	000100	C	RES	100		OR	0.00	0.00	2.52	AC		1.00	1.00	0.50	85,000.00	42,500.00	107,100							

REVIEW DATE 05/12/2019 BY KBA Total Acres: 5.25 Total Land Value: 223,125 Market: 0 Agricultural: 0 Common: 223,125 PRINTED 07/30/2025 BY SYS