PT JOHN LOWE MILL GRANT
SEC 51-3N-27E IN OR 2549/155
PARCELS 1 & 2

DUNCAN LESLIE
86154 PAGES DAIRY RD
YULEE, FL 32097

2025

51-3N-27-0000-0037-0040

BUILDING CHARACTERISTICS

ELEMENT	CD	CONSTRUCTION
Exterior Wall	26	AL SIDING 100
Roof Structur	03	GABLE/HIP 100
Roof Cover	03	COMP SHNGL 100
Interior Wall	04	PLYWOOD 100
Interior Floo	14	CARPET 100
Air Condition	03	CENTRAL 100
Heating Type	04	AIR DUCTED 100
Bedrooms		3 100
Bathrooms		2 100
Frame	02	WOOD FRAME 100
Stories	1.	1. 100
Units		0 100
BUD8 Adjustme	04	DIST 01 100

Quality	02	Quality Level 02
DOR CODE	0200	MOBILE HOME
MAP NUM		MKT AREA 04
NEIGHBORHOOD/LOC	4053.00	

AREA TYPE	TOTAL GROSS AREA	PCT OF BASE	YEAR	TOT ADJ AREA	SUBAREA MARKET VALUE
BAS	1,824	100	1993	1,824	33,707
BAS	180	100	2021	180	3,326
FOP	200	30	2002	60	1,109
FOP	12	30	2021	4	74
UCP	532	20	2021	106	1,959
UOP	392	25	1993	98	1,811
TOTALS	3,140			2,272	41,986

MARKET ADJUSTMENTS

TYPE	MDL	EFF. AREA	TOT ADJ PTS	EFF. BASE RATE	REPL. COST NEW	AYB	EYB	ECON	FNCT		NORM	% COND
0820	02	2,272	77.0000	61.60	139,955	1975	1975	0	0	0	70.00	30.00

1 M/H 93- – 0% - 0 Heated Area: 2004 HX Base Yr

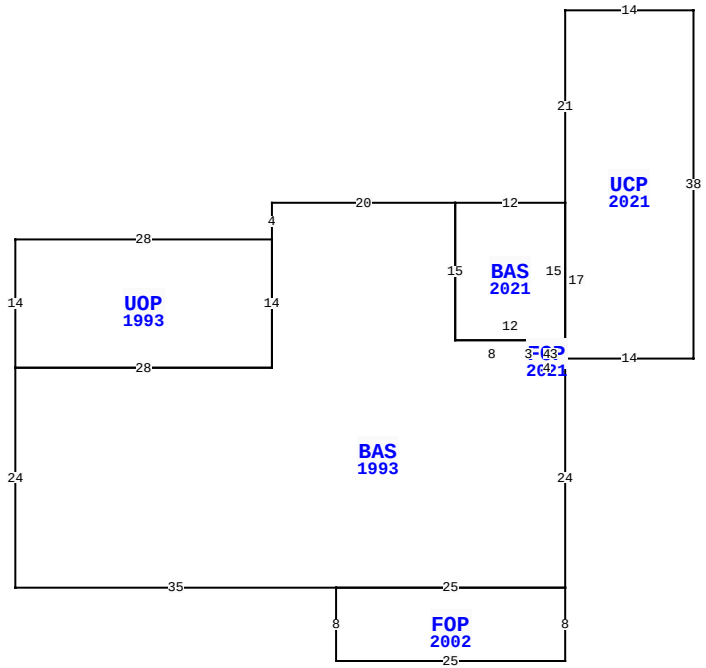

86162 PAGES DAIRY RD, YULEE

BLD DATE		LGL DATE	
XF DATE		LAND DATE	05/08/2025 MLU
INC DATE		AG DATE	

EXTRA FEATURES

LN	OB/XF CODE	DESCRIPTION	BLD	CAP	L	W	UNITS	UT	Adj R	ADJ UNIT PRICE	ORIG COND	YEAR ON	YEAR ACTUAL	Q	% COND	OB/XF MKT VALUE	NOTES
1	0861	POOL GUNIT	0	0	0	0	420.00	SF	85.00	85.00	100	1980	1980	3	20	7,140	
2	0845	KOOL DECK	0	0	80	3	240.00	SF	7.25	7.25	100	1980	1980	3	30	522	
3	1242	WD DECK A	0	0	4	8	32.00	SF	10.00	10.00	100	1980	1980	3	20	64	
4	0681	POLE SHED	0	0	0	0	800.00	SF	15.00	15.00	100	1980	1980	3	20	2,400	

NASSAU COUNTY PROPERTY

VALUATION SUMMARY

VALUATION BY	STANDARD
Tax Group: 4	Tax Dist:
BUILDING MARKET VALUE	41,986
TOTAL MARKET OB/XF VALUE	10,126
TOTAL LAND VALUE - MARKET	85,000
TOTAL MARKET VALUE	137,112
SOH/AGL Deduction	21,886
ASSESSED VALUE	115,226
TOTAL EXEMPTION VALUE	0
BASE TAXABLE VALUE	115,226
TOTAL JUST VALUE	137,112
NCON VALUE	0
INCOME VALUE	
PREVIOUS YEAR MKT VALUE	126,908

PERMIT NUM	DESCRIPTION	AMT	ISSUED
B0310717	FOUNDATION	1,900	01/01/2003

SALES DATA

OFF RECORD Number	DATE	TYPE INST	Q U /	V I /	RSN CD	SALE PRICE
2549/0155	3/21/2022	WD	U	I	11	100
GRANTOR: DUNCAN LESLIE						
GRANTEE: DUNCAN LESLIE C						
2426/1684	1/20/2021	QC	U	I	11	100
GRANTOR: SUMMERVILLE ERIC W						
GRANTEE: DUNCAN LESLIE C						

BUILDING NOTES

BUILDING DIMENSIONS

BAS=[YR=2021] W12 BAS=[YR=1993] W20 S4 UOP=[YR=1993] W28 S14 E28 N14 $ S14 W28 S24 E35 FOP=[YR=2002] S8 E25 N8 W25 $ E25 N24 FOP=[YR=2021] W4 N3 E4 S3$ W4 N3 W8 N15 $ S15 E12 N15 $ UCP=[YR=2021] N21 E14 S38 W14 N17$.

LAND DESCRIPTION

TOTAL OB/XF 10,126

LN	USE CODE	CLS	LAND USE DESCRIPTION	CAP	RD	LOC ZONE	FRONT	DEPTH	TOT LND UTS	UNIT TYPE	DT	DPTH FACT	% COND	TOT ADJ	UNIT PRICE	ADJ UNIT PRICE	LAND VALUE	OTHER ADJUSTMENTS AND NOTES	YEAR	DENSITY	DECL	FRZ	YR	CONSRV
1	000100	C	RES	0		OR	0.00	0.00	1.00	AC		1.00	1.00	1.00	85,000.00	85,000.00	85,000							

REVIEW DATE 06/08/2022 BY NW Total Acres: 1.00 Total Land Value: 85,000 Market: 0 Agricultural: 0 Common: 85,000 PRINTED 07/30/2025 BY SYS