LOT 90
IN OR 1537/1796
AMHURST OAKS PB 7/180

COKER ANGELA & RYAN
45262 INGLEHAM CIRCLE
CALLAHAN, FL 32011

**2025**

**51-2N-25-015A-0090-0000**

## NASSAU COUNTY PROPERTY



### BUILDING CHARACTERISTICS

| ELEMENT | CD | CONSTRUCTION |
|---|---|---|
| Exterior Wall | 31 | HARDIE BRD 80 |
| Exterior Wall | 16 | WD FR STUC 20 |
| Roof Structur | 03 | GABLE/HIP 100 |
| Roof Cover | 03 | COMP SHNGL 100 |
| Interior Wall | 05 | DRYWALL 100 |
| Interior Floo | 14 | CARPET 80 |
| Interior Floo | 11 | CLAY TILE 20 |
| Air Condition | 03 | CENTRAL 100 |
| Heating Type | 04 | AIR DUCTED 100 |
| Bedrooms | | 3 100 |
| Bathrooms | | 2 100 |
| Frame | 02 | WOOD FRAME 100 |
| Stories | 1.5 | 1.5 100 |
| Units | | 0 100 |
| Occupancy | 00 | NONE 100 |
| Quality | 05 | Quality Level 05 |
| DOR CODE | 0100 | SINGLE FAMILY |
| MAP NUM | | MKT AREA 07 |
| NEIGHBORHOOD/LOC | 7003.00 | |

| AREA TYPE | TOTAL GROSS AREA | PCT OF BASE | YEAR | TOT ADJ AREA | SUBAREA MARKET VALUE |
|---|---|---|---|---|---|
| BAS | 1,867 | 100 | 2007 | 1,867 | 198,584 |
| FGR | 471 | 55 | 2007 | 259 | 27,549 |
| FOP | 69 | 30 | 2007 | 21 | 2,234 |
| FSP | 143 | 40 | 2012 | 57 | 6,063 |
| FST | 25 | 55 | 2007 | 14 | 1,489 |
| FUS | 254 | 100 | 2007 | 254 | 27,017 |
| TOTALS | 2,829 | | | 2,472 | 262,934 |

### MARKET ADJUSTMENTS

| TYPE | MDL | EFF. AREA | TOT ADJ PTS | EFF. BASE RATE | REPL. COST NEW | AYB | EYB | ECON | FNCT | | NORM | % COND |
|---|---|---|---|---|---|---|---|---|---|---|---|---|
| 0100 | 01 | 2,472 | 115.7376 | 115.74 | 286,109 | 2007 | 2007 | 0 | 0 | 0 | 8.10 | 91.90 |

1 SINGLE FAM – 100% - 2008 Heated Area: 2121 HX Base Yr 2008

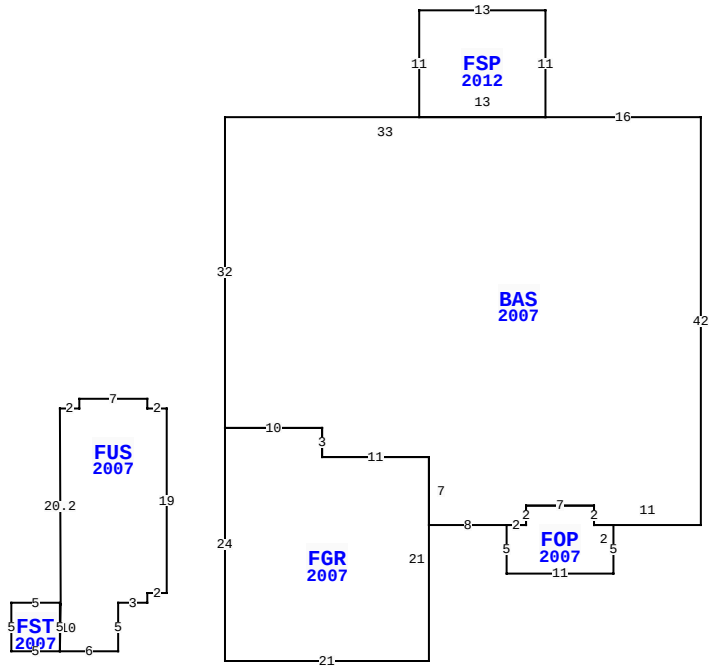


45262 INGLEHAM CIR, CALLAHAN

| | | | |
|---|---|---|---|
| BLD DATE | | LGL DATE | |
| XF DATE | | LAND DATE | |
| INC DATE | | AG DATE | |

### VALUATION SUMMARY

| | | |
|---|---|---|
| VALUATION BY | | STANDARD |
| Tax Group: 1 | Tax Dist: | |
| BUILDING MARKET VALUE | | 262,934 |
| TOTAL MARKET OB/XF VALUE | | 8,636 |
| TOTAL LAND VALUE - MARKET | | 40,000 |
| TOTAL MARKET VALUE | | 311,570 |
| SOH/AGL Deduction | | 149,578 |
| ASSESSED VALUE | | 161,992 |
| TOTAL EXEMPTION VALUE | HX HB | 50,722 |
| BASE TAXABLE VALUE | | 111,270 |
| TOTAL JUST VALUE | | 311,570 |
| NCON VALUE | | 0 |
| INCOME VALUE | | |
| PREVIOUS YEAR MKT VALUE | | 299,868 |

| PERMIT NUM | DESCRIPTION | AMT | ISSUED |
|---|---|---|---|
| R23-4714 | ROOF | | 11/29/2023 |
| 3104 | NEW CONSTR | 137,460 | 07/30/2007 |

### SALES DATA

| OFF RECORD Number | DATE | TYPE INST | Q U | V I | RSN CD | SALE PRICE |
|---|---|---|---|---|---|---|
| 1537/1796 | 11/28/2007 | WD | Q | I | | 237,700 |
| GRANTOR: TOUSA HOMES INC | | | | | | |
| GRANTEE: COKER ANGELA & RYAN | | | | | | |
| 1438/1860 | 8/23/2006 | WD | U | V | 19 | 4,230,000 |
| GRANTOR: AMHURST OAKS LLC | | | | | | |
| GRANTEE: TOUSA HOMES INC | | | | | | |

### BUILDING NOTES

### BUILDING DIMENSIONS

BAS=[YR=2007;ORIG=0,0] W16 W33 S32 E10 S3 E11 S7 E8 E2 N2 E7 S2 E11 N42 $
FGR=[YR=2007;ORIG=-49,32] S24 E21 N21 W11 N3 W10 $
FUS=[YR=2007;ORIG=-66,30] E2 N1 E7 S1 E2 S19 W2 S1 W3 S5 W6 U4.10R0.1 U20.2L0.1 $
FSP=[YR=2012;ORIG=-16,0] N11 W13 S11 E13 $
FOP=[YR=2007;ORIG=-20,42] S5 E11 N5 W2 N2 W7 S2 W2 $
FST=[YR=2007;ORIG=-66,55] W5 N5 E5 S5 $
PTR=[ORIG=0,0] E15 W15 $
.

### EXTRA FEATURES

| LN | OB/XF CODE | DESCRIPTION | BLD | CAP | L | W | UNITS | UT | Adj R | ADJ UNIT PRICE | ORIG COND | YEAR ON | YEAR ACTUAL | Q | % COND | OB/XF MKT VALUE | NOTES |
|---|---|---|---|---|---|---|---|---|---|---|---|---|---|---|---|---|---|
| 1 | 0811 | CONCRETE B | 0 | 100 | 0 | 0 | 771.00 | SF | 5.20 | 5.20 | 100 | 2007 | 2007 | 3 | 87 | 3,488 | |
| 2 | 0810 | CONCRETE A | 0 | 100 | 0 | 0 | 800.00 | SF | 6.50 | 6.50 | 100 | 2023 | 2022 | | 99 | 5,148 | |

### LAND DESCRIPTION

TOTAL OB/XF 8,636

| LN | USE CODE | CLS | LAND USE DESCRIPTION | CAP | RD | LOC ZONE | FRONT | DEPTH | TOT LND UTS | UNIT TYPE | DT | DPTH FACT | % COND | TOT ADJ | UNIT PRICE | ADJ UNIT PRICE | LAND VALUE | OTHER ADJUSTMENTS AND NOTES | YEAR | DENSITY | DECL | FRZ | YR | CONSRV |
|---|---|---|---|---|---|---|---|---|---|---|---|---|---|---|---|---|---|---|---|---|---|---|---|---|
| 1 | 000100 | C | RES | 100 | | RL | 0.00 | 0.00 | 1.00 | LT | | 1.00 | 1.00 | 1.00 | 40,000.00 | 40,000.00 | 40,000 | | | | | | | |

REVIEW DATE 01/06/2023 BY KWA Total Acres: 0.00 Total Land Value: 40,000 Market: 0 Agricultural: 0 Common: 40,000 PRINTED 07/30/2025 BY SYS