PT UNNUMBERED 32 ACRE TRACT OF
PBK 1/1 & PT OF GOVT LOT 2 OF
SEC 56-3N-28E IN OR 1136/1023

MORRISSEY THOMAS K & ROBIN P
96315 GLENWOOD ROAD
YULEE, FL 32097

2025

50-3N-28-5280-0001-006A

NASSAU COUNTY PROPERTY

BUILDING CHARACTERISTICS

ELEMENT	CD	CONSTRUCTION
Exterior Wall	12	CEDAR 100
Roof Structur	03	GABLE/HIP 100
Roof Cover	03	COMP SHNGL 100
Interior Wall	05	DRYWALL 70
Interior Wall	08	DECORATIVE 30
Interior Floo	15	HARDTILE 60
Interior Floo	09	PINE WOOD 40
Air Condition	03	CENTRAL 100
Heating Type	04	AIR DUCTED 100
Bedrooms		3 100
Bathrooms		2.5 100
Frame	02	WOOD FRAME 100
Stories	2.	2. 100
Units		0 100
BUD8 Adjustme	04	DIST 01 100
Occupancy	00	NONE 100
Quality	01	Quality Level 01
DOR CODE	0100	SINGLE FAMILY
MAP NUM		MKT AREA 04
NEIGHBORHOOD/LOC	4029.00	

AREA TYPE	TOTAL GROSS AREA	PCT OF BASE	YEAR	TOT ADJ AREA	SUBAREA MARKET VALUE
BAS	1,278	100	1993	1,278	151,602
FOP	440	30	1993	132	15,658
FST	96	55	1993	53	6,287
FUS	384	100	1993	384	45,552
UDG	672	55	1993	370	43,891
USP	80	30	1993	24	2,847
USP	182	30	2002	55	6,524
TOTALS	3,132			2,296	272,362

MARKET ADJUSTMENTS

TYPE	MDL	EFF. AREA	TOT ADJ PTS	EFF. BASE RATE	REPL. COST NEW	AYB	EYB	ECON	FNCT		NORM	% COND
0900	01	2,296	106.9866	141.22	324,241	1982	1992	0	0	0	16.00	84.00

1 SNGL FAM – 100% - 2003 Heated Area: 1662 HX Base Yr 2003

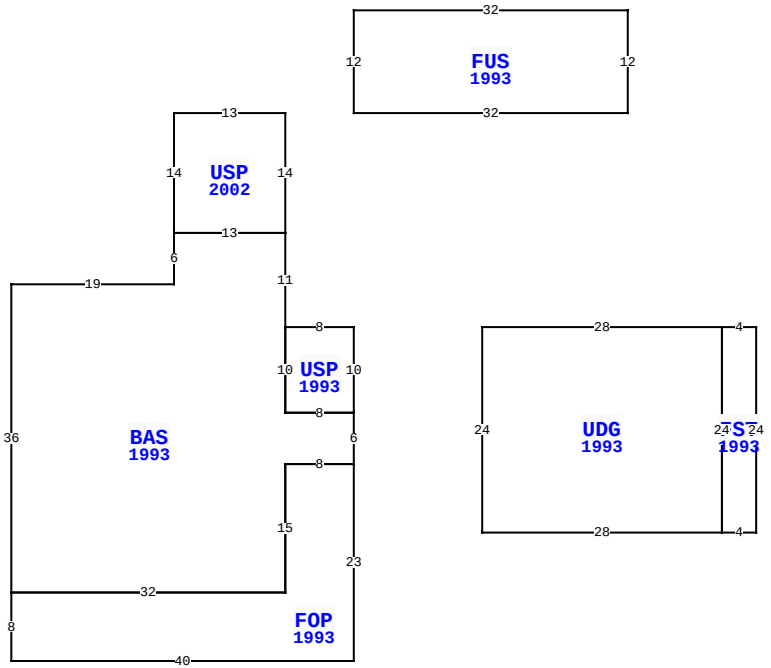

96315 GLENWOOD RD, YULEE

BLD DATE		LGL DATE	
XF DATE		LAND DATE	06/21/2023 MLU
INC DATE		AG DATE	

VALUATION SUMMARY

VALUATION BY		STANDARD
Tax Group: 4	Tax Dist:	
BUILDING MARKET VALUE		272,362
TOTAL MARKET OB/XF VALUE		20,055
TOTAL LAND VALUE - MARKET		148,227
TOTAL MARKET VALUE		440,644
SOH/AGL Deduction		150,335
ASSESSED VALUE		290,309
TOTAL EXEMPTION VALUE	HX HB	50,722
BASE TAXABLE VALUE		239,587
TOTAL JUST VALUE		440,644
NCON VALUE		0
INCOME VALUE		
PREVIOUS YEAR MKT VALUE		431,150

PERMIT NUM	DESCRIPTION	AMT	ISSUED
E03747	ELEC OTHER	0	06/01/2017
1168	NEW CONSTR	33,988	01/02/1982

SALES DATA

OFF RECORD Number	DATE	TYPE INST	Q / U	V / I	RSN CD	SALE PRICE
1136/1023	5/12/2003	WD	U	I	07	100
GRANTOR: ROSZELL TIMOTHY J & N						
GRANTEE: MORRISSEY THOMAS K						
1068/0294	7/12/2002	WD	Q	I		325,000
GRANTOR: ROSZELL TIMOTHY J & N						
GRANTEE: MORRISSEY THOMAS K						

BUILDING NOTES

BUILDING DIMENSIONS

USP=[YR=1993] W8 BAS=[YR=1993] N11USP=[YR=2002] N14 W13 S14 E13 $ W13 S6 W19 S36 FOP=[YR=1993] S8 E40 N23 W8 S15 W32 $ E32 N15 E8 N6 W8 N10$ S10 E8N10 $ PTR= E15 UDG=[YR=1993] E28FST=[YR=1993] E4 S24 W4 N24 $ S24 W28 N24 $ W15 $ PTR= N25 FUS=[YR=1993] N12 E32 S12 W32 $ S25 $.

EXTRA FEATURES

LN	OB/XF CODE	DESCRIPTION	BLD	CAP	L	W	UNITS	UT	Adj R	ADJ UNIT PRICE	ORIG COND	YEAR ON	YEAR ACTUAL	Q	% COND	OB/XF MKT VALUE	NOTES
1	0500	FP-PRE FAB	0	100	0	0	1.00	UT	3,500.00	3,500.00	100	1982	1982	3	49	1,715	
2	0920	CWALL-WD/M	0	100	0	0	105.00	LF	390.00	390.00	100	2002	2002	3	20	8,190	
3	1241	WD DECK G	0	100	0	0	940.00	UT	11.50	11.50	100	2002	2002	3	29	3,135	
4	0812	CONCRETE C	0	100	0	0	1,440.00	SF	4.00	4.00	100	2002	2002	3	80	4,608	
5	0752	USP	0	100	0	0	225.00	SF	15.00	15.00	100	2002	2002	3	29	979	
6	0940	SHEDS/PORT	0	100	0	0	238.00	SF	30.00	30.00	100	2002	2002	3	20	1,428	

LAND DESCRIPTION

TOTAL OB/XF 20,055

LN	USE CODE	CLS	LAND USE DESCRIPTION	CAP	RD	LOC ZONE	FRONT	DEPTH	TOT LND UTS	UNIT TYPE	DT	DPTH FACT	% COND	TOT ADJ	UNIT PRICE	ADJ UNIT PRICE	LAND VALUE	OTHER ADJUSTMENTS AND NOTES	YEAR	DENSITY	DECL	FRZ	YR	CONSRV
1	000116	C	RES MARSH	100	0008	RSF-1	0.00	0.00	1.85	AC		1.00	1.00	1.00	80,000.00	80,000.00	148,000							
2	009620	C	MARSH	0		RSF-1	0.00	0.00	2.27	AC		1.00	1.00	1.00	100.00	100.00	227							

REVIEW DATE 05/12/2019 BY KBA Total Acres: 4.12 Total Land Value: 148,227 Market: 0 Agricultural: 0 Common: 148,227 PRINTED 07/30/2025 BY SYS