LOT 40
BLACKROCK HAMMOCK PB 6/286

**DEAL DEBORAH & BOBBY**
96082 SCARLET OAKS CT
YULEE, FL 32097

# 2025

**50-3N-28-016B-0040-0000**

## NASSAU COUNTY PROPERTY



## BUILDING CHARACTERISTICS

| ELEMENT | CD | CONSTRUCTION |
|---|---|---|
| Exterior Wall | 31 | HARDIE BRD 90 |
| Exterior Wall | 20 | FACE BRICK 10 |
| Roof Structur | 08 | IRREGULAR 100 |
| Roof Cover | 03 | COMP SHNGL 100 |
| Interior Wall | 05 | DRYWALL 100 |
| Interior Floo | 11 | CLAY TILE 70 |
| Interior Floo | 14 | CARPET 30 |
| Air Condition | 03 | CENTRAL 100 |
| Heating Type | 04 | AIR DUCTED 100 |
| Bedrooms | | 6 100 |
| Bathrooms | | 4.5 100 |
| Frame | 02 | WOOD FRAME 100 |
| Stories | 2. | 2. 100 |
| Units | | 0 100 |
| Occupancy | 00 | NONE 100 |
| Quality | 01 | Quality Level 01 |
| DOR CODE | 0100 | SINGLE FAMILY |
| MAP NUM | | MKT AREA 04 |
| NEIGHBORHOOD/LOC | 4028.00 | |

| AREA TYPE | TOTAL GROSS AREA | PCT OF BASE | YEAR | TOT ADJ AREA | SUBAREA MARKET VALUE |
|---|---|---|---|---|---|
| BAS | 518 | 100 | 2004 | 518 | 67,691 |
| BAS | 2,709 | 100 | 2004 | 2,709 | 354,005 |
| FGR | 790 | 55 | 2004 | 434 | 56,714 |
| FOP | 75 | 30 | 2004 | 22 | 2,875 |
| FOP | 336 | 30 | 2004 | 101 | 13,199 |
| FOP | 411 | 30 | 2004 | 123 | 16,073 |
| FUS | 1,041 | 100 | 2004 | 1,041 | 136,035 |
| PTO | 80 | 5 | 2004 | 4 | 523 |
| TOTALS | 5,960 | | | 4,952 | 647,114 |

## MARKET ADJUSTMENTS

| TYPE | MDL | EFF. AREA | TOT ADJ PTS | EFF. BASE RATE | REPL. COST NEW | AYB | EYB | ECON | FNCT | | NORM | % COND |
|---|---|---|---|---|---|---|---|---|---|---|---|---|
| 0500 | 01 | 4,952 | 92.1834 | 145.65 | 721,259 | 2004 | 2004 | 0 | 0 | 0 | 10.28 | 89.72 |

1 SFR CUST – 100% - 2024 Heated Area: 4268 HX Base Yr 2024

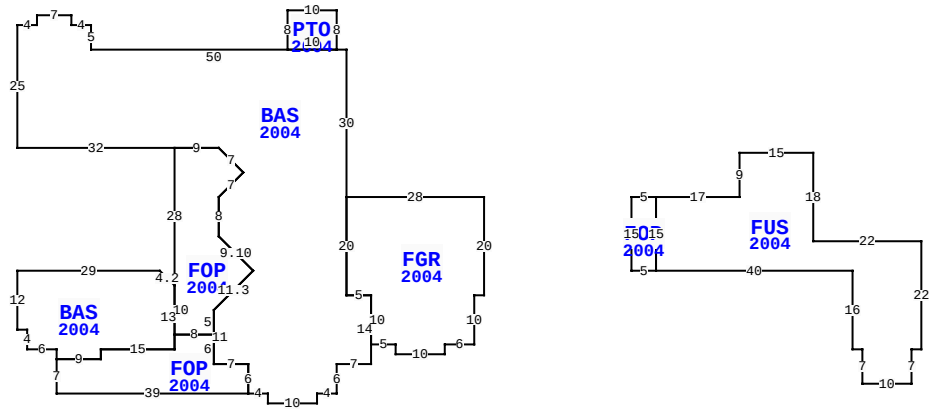


96082 SCARLET OAKS CT, YULEE

| | | | |
|---|---|---|---|
| BLD DATE | 04/04/2023 NW | LGL DATE | |
| XF DATE | | LAND DATE | 04/01/2025 MLU |
| INC DATE | | AG DATE | |

## VALUATION SUMMARY

| | | |
|---|---|---|
| VALUATION BY | | STANDARD |
| Tax Group: 4 | Tax Dist: | |
| BUILDING MARKET VALUE | | 667,921 |
| TOTAL MARKET OB/XF VALUE | | 53,771 |
| TOTAL LAND VALUE - MARKET | | 170,000 |
| TOTAL MARKET VALUE | | 891,692 |
| SOH/AGL Deduction | | 213,928 |
| ASSESSED VALUE | | 677,764 |
| TOTAL EXEMPTION VALUE | HX HB | 50,722 |
| BASE TAXABLE VALUE | | 627,042 |
| TOTAL JUST VALUE | | 891,692 |
| NCON VALUE | | 0 |
| INCOME VALUE | | |
| PREVIOUS YEAR MKT VALUE | | 808,760 |

| PERMIT NUM | DESCRIPTION | AMT | ISSUED |
|---|---|---|---|
| 21016470 | ADDITION | 8,562 | 11/29/2021 |
| R2008865 | REPAIR/RRF | 6,000 | 10/01/2020 |
| B1904745 | GARAGE | 35,085 | 05/07/2019 |

## SALES DATA

| OFF RECORD Number | DATE | TYPE INST | Q / U | V / I | RSN CD | SALE PRICE |
|---|---|---|---|---|---|---|
| 2649/1694 | 6/23/2023 | WD | Q | I | 01 | 870,000 |
| GRANTOR: BARBER JACQUELINE B & | | | | | | |
| GRANTEE: DEAL DEBORAH & BOBB | | | | | | |
| 2010/1172 | 9/18/2015 | WD | U | I | 11 | 100 |
| GRANTOR: AIELLO JAMES J | | | | | | |
| GRANTEE: BARBER JACQUELINE B | | | | | | |

## BUILDING NOTES

## BUILDING DIMENSIONS

FGR=[YR=2004] W28 BAS=[YR=2004] N30 W2 PTO=[YR=2004] N8 W10 S8 E10 $ W50 N5 W4 N2 W7 S2 W4 S25 E32 FOP=[YR=2004] S28 BAS=[YR=2004] U3 L3 W29 S12 E2 S4 E6 S2 FOP=[YR=2004] S7 E39 N6 W7 N6 W8 S3 W15 S2 W9 $ E9 N2 E15 N13 $ S10 E8 N5 U8 R8 U7 L7 N8 U5 R5 U5 L5 W9 $ E9 D5 R5 D5 L5 S8 D7 R7 D8 L8 S11 E7 S6 E4 S2 E10 N2 E4 N6 E7 N14 W5 N20 $ S20 E5 S10 E5 S2 E10 N2 E6 N10 E2 N20 $ PTR= E30 FOP=[YR=2004] E5FUS=[YR=2004] E17 N9 E15 S18 E22 S22 W2 S7 W10 N7 W2 N16 W40 N15 $ S15 W5 N15 $ W30 $.

## EXTRA FEATURES

| LN | OB/XF CODE | DESCRIPTION | BLD | CAP | L | W | UNITS | UT | Adj R | ADJ UNIT PRICE | ORIG COND | YEAR ON | YEAR ACTUAL | Q | % COND | OB/XF MKT VALUE | NOTES |
|---|---|---|---|---|---|---|---|---|---|---|---|---|---|---|---|---|---|
| 1 | 0861 | POOL GUNIT | 0 | 100 | 32 | 14 | 448.00 | SF | 85.00 | 85.00 | 100 | 2004 | 2004 | 3 | 32 | 12,186 | |
| 2 | 0845 | KOOL DECK | 0 | 100 | 0 | 0 | 541.00 | SF | 7.25 | 7.25 | 100 | 2004 | 2004 | 3 | 83 | 3,255 | |
| 3 | 1127 | BRICK 8" | 0 | 100 | 0 | 0 | 238.00 | SF | 11.00 | 11.00 | 100 | 2004 | 2004 | 3 | 95 | 2,487 | |
| 4 | 0855 | CONC PAVER | 0 | 100 | 0 | 0 | 171.00 | SF | 10.00 | 10.00 | 100 | 2007 | 2007 | 3 | 87 | 1,488 | |
| 5 | 1126 | CB/STC 8" | 0 | 100 | 0 | 0 | 57.00 | SF | 8.00 | 8.00 | 100 | 2004 | 2004 | 3 | 83 | 378 | |
| 6 | 0855 | CONC PAVER | 0 | 100 | 0 | 0 | 2,962.00 | SF | 10.00 | 10.00 | 100 | 2004 | 2004 | 3 | 83 | 24,585 | |
| 7 | 0911 | SCRN RM A | 0 | 100 | 34 | 22 | 748.00 | SF | 17.50 | 17.50 | 100 | 2004 | 2004 | 3 | 21 | 2,749 | |
| 8 | 1134 | LANDSCP BL | 0 | 100 | 30 | 0 | 60.00 | SF | 3.00 | 3.00 | 100 | 2019 | 2019 | 3 | 99 | 178 | |
| 9 | 0855 | CONC PAVER | 0 | 100 | 20 | 20 | 400.00 | SF | 10.00 | 10.00 | 100 | 2019 | 2019 | 3 | 97 | 3,880 | |
| 10 | 0810 | CONCRETE A | 0 | 100 | 0 | 0 | 410.00 | SF | 6.50 | 6.50 | 100 | 2019 | 2019 | 3 | 97 | 2,585 | |

TOTAL OB/XF 53,771

## LAND DESCRIPTION

| LN | USE CODE | CLS | LAND USE DESCRIPTION | CAP | RD | LOC ZONE | FRONT | DEPTH | TOT LND UTS | UNIT TYPE | DT | DPTH FACT | % COND | TOT ADJ | UNIT PRICE | ADJ UNIT PRICE | LAND VALUE | OTHER ADJUSTMENTS AND NOTES | YEAR | DENSITY | DECL | FRZ | YR | CONSRV |
|---|---|---|---|---|---|---|---|---|---|---|---|---|---|---|---|---|---|---|---|---|---|---|---|---|
| 1 | 000134 | C | RES POND | 100 | | RSF-1 | 0.00 | 0.00 | 1.00 | LT | | 1.00 | 1.00 | 1.00 | 170,000.00 | 170,000.00 | 170,000 | | | | | | | |

REVIEW DATE 10/04/2019 BY KW Total Acres: 0.00 Total Land Value: 170,000 Market: 0 Agricultural: 0 Common: 170,000 PRINTED 07/30/2025 BY SYS

LOT 40
BLACKROCK HAMMOCK PB 6/286

**DEAL DEBORAH & BOBBY**
96082 SCARLET OAKS CT
YULEE, FL 32097

**2025**

**50-3N-28-016B-0040-0000**

## BUILDING CHARACTERISTICS

| ELEMENT | CD | CONSTRUCTION |
|---|---|---|
| Exterior Wall | 10 | ABOVE AVG 100 |
| Roof Structur | 03 | GABLE/HIP 100 |
| Roof Cover | 03 | COMP SHNGL 100 |
| Interior Wall | 07 | NONE 100 |
| Interior Floo | 03 | CONC FINSH 100 |
| Air Condition | 01 | NONE 100 |
| Heating Type | 01 | NONE 100 |
| Bedrooms | | 0 100 |
| Bathrooms | | 0 100 |
| Frame | 02 | WOOD FRAME 100 |
| Stories | 1. | 1. 100 |
| Units | | 0 100 |
| Quality | 06 | Quality Level 06 |

| | | | |
|---|---|---|---|
| DOR CODE | 0100 | SINGLE FAMILY | |
| MAP NUM | | MKT AREA | 04 |
| NEIGHBORHOOD/LOC | 4028.00 | | |

| AREA TYPE | TOTAL GROSS AREA | PCT OF BASE | YEAR | TOT ADJ AREA | SUBAREA MARKET VALUE |
|---|---|---|---|---|---|
| BAS | 720 | 100 | 2019 | 720 | 20,807 |
| TOTALS | 720 | | | 720 | 20,807 |

## MARKET ADJUSTMENTS

| TYPE | MDL | EFF. AREA | TOT ADJ PTS | EFF. BASE RATE | REPL. COST NEW | AYB | EYB | ECON | FNCT | | NORM | % COND |
|---|---|---|---|---|---|---|---|---|---|---|---|---|
| 6500 | 11 | 720 | 82.2030 | 30.42 | 21,902 | 2019 | 2019 | 0 | 0 | 0 | 5.00 | 95.00 |

2 GARAGE RES – 100% - 2024 Heated Area: 720 HX Base Yr 2024

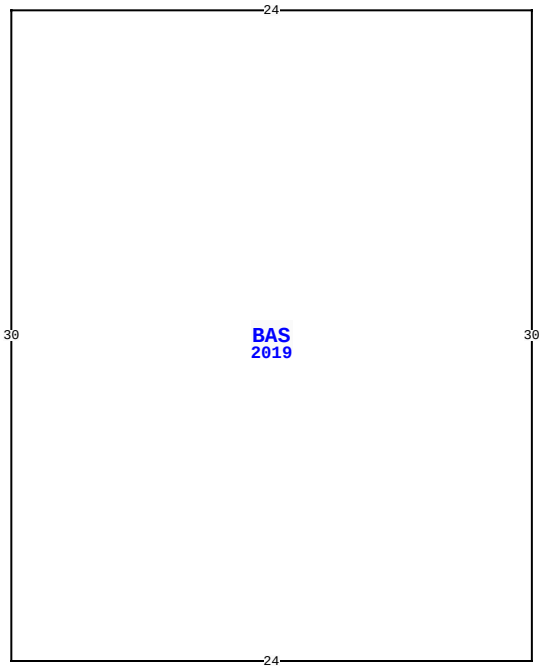


96082 SCARLET OAKS CT, YULEE

| | | | | |
|---|---|---|---|---|
| BLD DATE | 04/04/2023 | NW | LGL DATE | |
| XF DATE | | | LAND DATE | 04/01/2025 MLU |
| INC DATE | | | AG DATE | |

## NASSAU COUNTY PROPERTY

PAGE 2 of 2 4

### VALUATION SUMMARY

| | | |
|---|---|---|
| VALUATION BY | | STANDARD |
| Tax Group: 4 | Tax Dist: | |
| BUILDING MARKET VALUE | | 667,921 |
| TOTAL MARKET OB/XF VALUE | | 53,771 |
| TOTAL LAND VALUE - MARKET | | 170,000 |
| TOTAL MARKET VALUE | | 891,692 |
| SOH/AGL Deduction | | 213,928 |
| ASSESSED VALUE | | 677,764 |
| TOTAL EXEMPTION VALUE | HX HB | 50,722 |
| BASE TAXABLE VALUE | | 627,042 |
| TOTAL JUST VALUE | | 891,692 |
| NCON VALUE | | 0 |
| INCOME VALUE | | |
| PREVIOUS YEAR MKT VALUE | | 808,760 |

| PERMIT NUM | DESCRIPTION | AMT | ISSUED |
|---|---|---|---|
| | | | |

## SALES DATA

| OFF RECORD Number | DATE | TYPE INST | Q / U | V / I | RSN CD | SALE PRICE |
|---|---|---|---|---|---|---|
| 2649/1694 | 6/23/2023 | WD | Q | I | 01 | 870,000 |
| GRANTOR: BARBER JACQUELINE B & | | | | | | |
| GRANTEE: DEAL DEBORAH & BOBB | | | | | | |
| 2010/1172 | 9/18/2015 | WD | U | I | 11 | 100 |
| GRANTOR: AIELLO JAMES J | | | | | | |
| GRANTEE: BARBER JACQUELINE B | | | | | | |

## BUILDING NOTES

## BUILDING DIMENSIONS

BAS=[YR=2019] W24 S30 E24 N30$.

## EXTRA FEATURES

| L N | OB/XF CODE | DESCRIPTION | BLD | CAP | L | W | UNITS | UT | Adj R | ADJ UNIT PRICE | ORIG COND | YEAR ON | YEAR ACTUAL | Q | % COND | OB/XF MKT VALUE | NOTES |
|---|---|---|---|---|---|---|---|---|---|---|---|---|---|---|---|---|---|

## LAND DESCRIPTION

TOTAL OB/XF 0

| L N | USE CODE | CLS | LAND USE DESCRIPTION | CAP | R D | LOC ZONE | FRONT | DEPTH | TOT LND UTS | UNIT TYPE | D T | DPTH FACT | % COND | TOT ADJ | UNIT PRICE | ADJ UNIT PRICE | LAND VALUE | OTHER ADJUSTMENTS AND NOTES | YEAR | DENSITY | DECL | FRZ | YR | CONSRV |
|---|---|---|---|---|---|---|---|---|---|---|---|---|---|---|---|---|---|---|---|---|---|---|---|---|

REVIEW DATE 10/04/2019 BY KW Total Acres: 0.00 Total Land Value: 170,000 Market: 0 Agricultural: 0 Common: 170,000 PRINTED 07/30/2025 BY SYS