PARCEL 5B-2
EAST NASSAU-WILDLIGHT PDP3/
POD 5 OR 2546/1608

EXCHANGE WILDLIGHT APRTMENTS LLC
3300 NE EXPRESSWAY BLDG 6
ATLANTA, GA 30341

2025

50-3N-27-1005-05B2-0000

NASSAU COUNTY PROPERTY

BUILDING CHARACTERISTICS

ELEMENT	CD	CONSTRUCTION
Exterior Wall	31	HARDIE BRD 100
Roof Structur	04	WOOD TRUSS 100
Roof Cover	03	COMP SHNGL 100
Interior Wall	05	DRYWALL 100
Interior Floo	13	LVT/LAMNT 70
Interior Floo	14	CARPET 30
Air Condition	03	CENTRAL 100
Heating Type	04	AIR DUCTED 100
Bedrooms		2 100
Bathrooms		2 100
Frame	02	WOOD FRAME 100
Story Height		10 100
RMS		0 100
Stories	2.	2. 100
Units		2 100
Quality	05	Quality Level 05
DOR CODE	0300	MULTI-FAMILY
MAP NUM		MKT AREA 04
NEIGHBORHOOD/LOC	4086.0200	

AREA TYPE	TOTAL GROSS AREA	PCT OF BASE	YEAR	TOT ADJ AREA	SUBAREA MARKET VALUE
CAN	84	30	2025	25	5,003
CAN	84	30	2025	25	5,003
CAN	168	30	2025	50	10,005
CAN	208	30	2025	62	12,407
FGR	288	55	2025	158	31,617
FGR	288	55	2025	158	31,617
FGR	288	55	2025	158	31,617
FGR	288	55	2025	158	31,617
FGR	312	55	2025	172	34,418
FGR	312	55	2025	172	34,418
TOTALS	5,578			4,037	807,828

MARKET ADJUSTMENTS

TYPE	MDL	EFF. AREA	TOT ADJ PTS	EFF. BASE RATE	REPL. COST NEW	AYB	EYB	ECON	FNCT	AP	NORM	% COND
0302	03	4,037	128.5200	222.34	897,587	2024	2024	0	0	10	0.00	90.00

1 APART/LUX – 0% - 2025 Heated Area: 2508 HX Base Yr

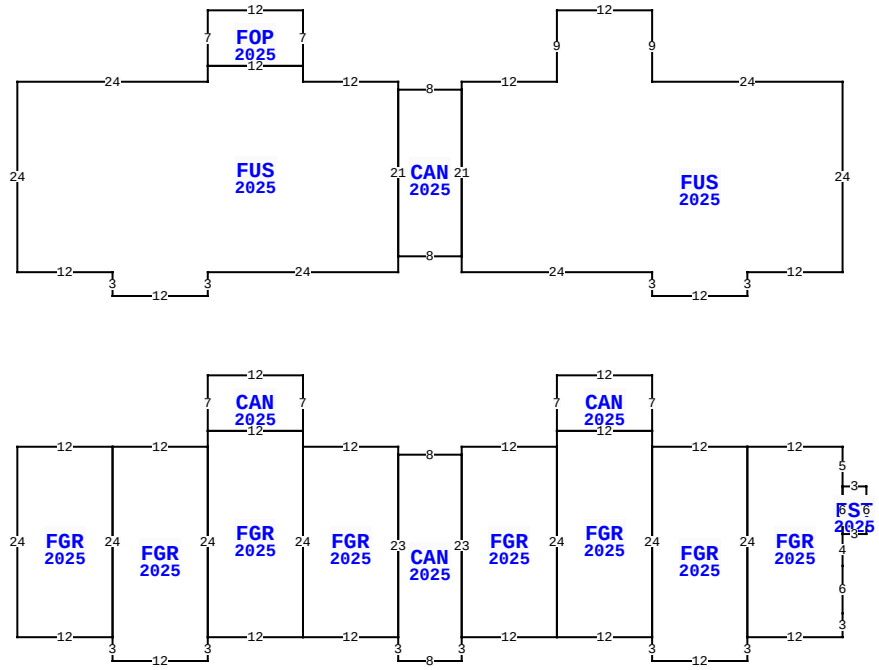

** This building has 16 Sub-Areas

549 WILDLIGHT AV, YULEE

BLD DATE	04/08/2025	REA	LGL DATE	05/09/2025	DC
XF DATE			LAND DATE		
INC DATE	07/11/2025	REA	AG DATE		

VALUATION SUMMARY

VALUATION BY	DIRECT_CAP
Tax Group: 4	Tax Dist:
BUILDING MARKET VALUE	59,291,719
TOTAL MARKET OB/XF VALUE	0
TOTAL LAND VALUE - MARKET	0
TOTAL MARKET VALUE	59,291,719
SOH/AGL Deduction	0
ASSESSED VALUE	59,291,719
TOTAL EXEMPTION VALUE	0
BASE TAXABLE VALUE	59,291,719
TOTAL JUST VALUE	59,291,719
NCON VALUE	56,908,025
INCOME VALUE	59,291,719
PREVIOUS YEAR MKT VALUE	4,500,000

PERMIT NUM	DESCRIPTION	AMT	ISSUED
CO240012218	APARTMENT BLDG 12	15,119,976	10/30/2024
CO240011339	APARTMENT BLDG 1	4,690,508	10/07/2024
CO240008953	APARTMENT BLDG 5	13,367,098	08/01/2024
CO240006579	MAINTENANCE GARAG	43,743	06/03/2024
CO240006357	APARTMENT BLDG 10	4,690,508	05/29/2024
CO240005493	APARTMENT BLDG 6	4,499,625	05/07/2024

SALES DATA

OFF RECORD Number	DATE	TYPE INST	Q / U	V / I	RSN CD	SALE PRICE
2575/0293	6/28/2022	SW	Q	V	01	4,800,000

GRANTOR: WILDLIGHT LLC

GRANTEE: EXCHANGE WILDLIGHT

BUILDING NOTES

EXTRA FEATURES

LN	OB/XF CODE	DESCRIPTION	BLD	CAP	L	W	UNITS	UT	Adj R	ADJ UNIT PRICE	ORIG COND	YEAR ON	YEAR ACTUAL	Q	% COND	OB/XF MKT VALUE	NOTES
1	0803	ASPHALT C	0	0	0	0	213,875.00	SF	2.00	2.00	100	2025	2024		100	427,750	
2	0812	CONCRETE C	0	0	1200	5	6,000.00	SF	4.00	4.00	100	2025	2024		100	24,000	
3	0812	CONCRETE C	0	0	4880	6	29,280.00	SF	4.00	4.00	100	2025	2024		100	117,120	
4	0400	CONC CURB	0	0	0	0	10,825.00	LF	15.00	15.00	100	2025	2024		100	162,375	
5	0972	ST LGHT UN	0	0	0	0	16.00	UT	2,530.00	2,530.00	100	2025	2024		100	40,480	
6	0861	POOL GUNIT	0	0	0	0	2,197.00	SF	85.00	85.00	100	2025	2024		100	186,745	
7	0855	CONC PAVER	0	0	0	0	4,835.00	SF	10.00	10.00	100	2025	2024		100	48,350	
8	0462	ST/AL FNC	0	0	250	5	1,250.00	SF	10.00	10.00	100	2025	2024		100	12,500	
9	0463	FENCE GATE	0	0	0	0	3.00	UT	300.00	300.00	100	2025	2024		100	900	
10	0462	ST/AL FNC	0	0	260	4	1,040.00	SF	10.00	10.00	100	2025	2024		100	10,400	

BUILDING DIMENSIONS

FUS=[YR=2025;ORIG=134,10] W24 N9 W12 S9 W12 S1 S21 S2 E24 S3 E12 N3 E12 N24 $
FUS=[YR=2025;ORIG=30,10] E24 N2 E12 S2 E12 S1 S21 S2 W24 S3 W12 N3 W12 N24 $
FGR=[YR=2025;ORIG=42,56] E12 S24 S3 W12 N3 N24 $
FGR=[YR=2025;ORIG=110,56] E12 S24 S3 W12 N3 N24 $
FGR=[YR=2025;ORIG=54,54] E12 S2 S24 W12 N24 N2 $
FGR=[YR=2025;ORIG=98,54] E12 S2 S24 W12 N24 N2 $
FGR=[YR=2025;ORIG=30,56] E12 S24 W12 N24 $
FGR=[YR=2025;ORIG=122,56] E12 S5 S6 S4 S6 S3 W12 N24 $
FGR=[YR=2025;ORIG=66,56] E12 S1 S23 W12 N24 $
FGR=[YR=2025;ORIG=98,56] W12 S1 S23 E12 N24 $

LAND DESCRIPTION

TOTAL OB/XF 1,030,620

LN	USE CODE	CLS	LAND USE DESCRIPTION	CAP	RD	LOC ZONE	FRONT	DEPTH	TOT LND UTS	UNIT TYPE	DT	DPTH FACT	% COND	TOT ADJ	UNIT PRICE	ADJ UNIT PRICE	LAND VALUE	OTHER ADJUSTMENTS AND NOTES	YEAR	DENSITY	DECL	FRZ	YR	CONSRV
1	000300	C	MULTI-FAMILY	0		PD -	E 0.00	0.00	300.00	UT		1.00	1.00	1.00	16,000.00	16,000.00	4,800,000							

REVIEW DATE 07/15/2022 BY RDC Total Acres: 0.00 Total Land Value: 0 Market: 0 Agricultural: 0 Common: 0 PRINTED 07/30/2025 BY SYS

PARCEL 5B-2
EAST NASSAU-WILDLIGHT PDP3/
POD 5 OR 2546/1608

EXCHANGE WILDLIGHT APRTMENTS LLC
3300 NE EXPRESSWAY BLDG 6
ATLANTA, GA 30341

2025

50-3N-27-1005-05B2-0000

NASSAU COUNTY PROPERTY

BUILDING CHARACTERISTICS

ELEMENT	CD	CONSTRUCTION
Exterior Wall	31	HARDIE BRD 100
Roof Structur	04	WOOD TRUSS 100
Roof Cover	03	COMP SHNGL 100
Interior Wall	05	DRYWALL 100
Interior Floo	13	LVT/LAMNT 70
Interior Floo	14	CARPET 30
Air Condition	03	CENTRAL 100
Heating Type	04	AIR DUCTED 100
Bedrooms		2 100
Bathrooms		2 100
Frame	02	WOOD FRAME 100
Story Height		10 100
RMS		0 100
Stories	2.	2. 100
Units		2 100
Quality	05	Quality Level 05
DOR CODE	0300	MULTI-FAMILY
MAP NUM		MKT AREA 04
NEIGHBORHOOD/LOC	4086.0200	

AREA TYPE	TOTAL GROSS AREA	PCT OF BASE	YEAR	TOT ADJ AREA	SUBAREA MARKET VALUE
CAN	84	30	2025	25	5,003
CAN	84	30	2025	25	5,003
CAN	168	30	2025	50	10,005
CAN	208	30	2025	62	12,407
FGR	288	55	2025	158	31,617
FGR	288	55	2025	158	31,617
FGR	288	55	2025	158	31,617
FGR	288	55	2025	158	31,617
FGR	312	55	2025	172	34,418
FGR	312	55	2025	172	34,418
TOTALS	5,578			4,037	807,828

MARKET ADJUSTMENTS

TYPE	MDL	EFF. AREA	TOT ADJ PTS	EFF. BASE RATE	REPL. COST NEW	AYB	EYB	ECON	FNCT	AP	NORM	% COND
0302	03	4,037	128.5200	222.34	897,587	2024	2024	0	0	10	0.00	90.00

2 APART/LUX - 0% - 2025 Heated Area: 2508 HX Base Yr

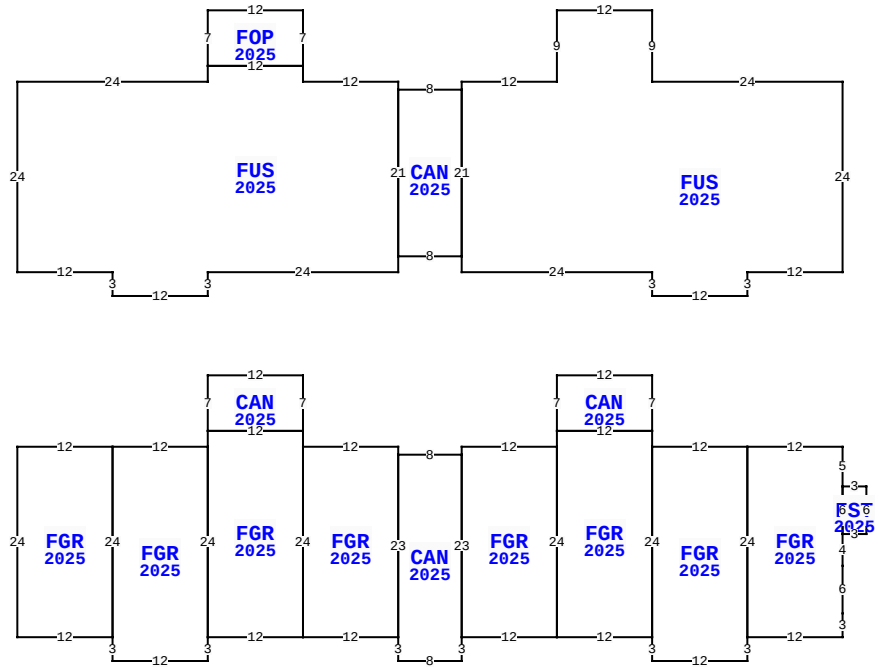

** This building has 16 Sub-Areas

549 WILDLIGHT AV, YULEE

BLD DATE	04/08/2025	REA	LGL DATE	05/09/2025	DC
XF DATE			LAND DATE		
INC DATE	07/11/2025	REA	AG DATE		

NASSAU COUNTY PROPERTY VALUATION SUMMARY

VALUATION BY	DIRECT_CAP
Tax Group: 4	Tax Dist:
BUILDING MARKET VALUE	59,291,719
TOTAL MARKET OB/XF VALUE	0
TOTAL LAND VALUE - MARKET	0
TOTAL MARKET VALUE	59,291,719
SOH/AGL Deduction	0
ASSESSED VALUE	59,291,719
TOTAL EXEMPTION VALUE	0
BASE TAXABLE VALUE	59,291,719
TOTAL JUST VALUE	59,291,719
NCON VALUE	56,908,025
INCOME VALUE	59,291,719
PREVIOUS YEAR MKT VALUE	4,500,000

PERMIT NUM	DESCRIPTION	AMT	ISSUED
CO240005308	APARTMENT BLDG 4	4,781,942	05/02/2024
CO240003225	APARTMENT BLDG 3	4,499,625	03/20/2024
CO240002178	APARTMENT BLDG 1	885,892	02/23/2024
CO240002173	APARTMENT BLDG 7	2,291,522	02/23/2024
CO240002175	APARTMENT BLDG 8	868,953	02/23/2024
CO240002176	APARTMENT BLDG 9	868,953	02/23/2024

SALES DATA

OFF RECORD Number	DATE	TYPE INST	Q / U	V / I	RSN CD	SALE PRICE
2575/0293	6/28/2022	SW	Q	V	01	4,800,000

GRANTOR: WILDLIGHT LLC

GRANTEE: EXCHANGE WILDLIGHT

BUILDING NOTES

EXTRA FEATURES

LN	OB/XF CODE	DESCRIPTION	BLD	CAP	L	W	UNITS	UT	Adj R	ADJ UNIT PRICE	ORIG COND	YEAR ON	YEAR ACTUAL	Q	% COND	OB/XF MKT VALUE	NOTES
11	0463	FENCE GATE	0	0	0	0	2.00	UT	300.00	300.00	100	2025	2024		100	600	
12	1123	CB 8"	0	0	72	8	576.00	SF	6.15	6.15	100	2025	2024		100	3,542	
13	0465	FNC GT 15'	0	0	0	0	1.00	UT	450.00	450.00	100	2025	2024		100	450	
14	0410	ELEVATOR	0	0	0	0	2.00	UT	90,000.00	90,000.00	100	2025	2024		100	180,000	
15	0966	FIRE SPRNK	1	0	0	0	2,501.00	SF	3.00	3.00	100	2025	2024		100	7,503	
16	0966	FIRE SPRNK	2	0	0	0	2,501.00	SF	3.00	3.00	100	2025	2024		100	7,503	
17	0966	FIRE SPRNK	8	0	0	0	2,501.00	SF	3.00	3.00	100	2025	2024		100	7,503	
18	0966	FIRE SPRNK	9	0	0	0	2,501.00	SF	3.00	3.00	100	2025	2024		100	7,503	
19	0966	FIRE SPRNK	13	0	0	0	7,158.00	SF	3.00	3.00	100	2025	2024		100	21,474	
20	0966	FIRE SPRNK	12	0	0	0	78,824.00	SF	3.00	3.00	100	2025	2024		100	236,472	

TOTAL OB/XF 472,550

BUILDING DIMENSIONS

FUS=[YR=2025;ORIG=134,10] W24 N9 W12 S9 W12 S1 S21 S2 E24 S3 E12 N3 E12 N24 $
FUS=[YR=2025;ORIG=30,10] E24 N2 E12 S2 E12 S1 S21 S2 W24 S3 W12 N3 W12 N24 $
FGR=[YR=2025;ORIG=42,56] E12 S24 S3 W12 N3 N24 $
FGR=[YR=2025;ORIG=110,56] E12 S24 S3 W12 N3 N24 $
FGR=[YR=2025;ORIG=54,54] E12 S2 S24 W12 N24 N2 $
FGR=[YR=2025;ORIG=98,54] E12 S2 S24 W12 N24 N2 $
FGR=[YR=2025;ORIG=30,56] E12 S24 W12 N24 $
FGR=[YR=2025;ORIG=122,56] E12 S5 S6 S4 S6 S3 W12 N24 $
FGR=[YR=2025;ORIG=66,56] E12 S1 S23 W12 N24 $
FGR=[YR=2025;ORIG=98,56] W12 S1 S23 E12 N24 $

LAND DESCRIPTION

LN	USE CODE	CLS	LAND USE DESCRIPTION	CAP	RD	LOC ZONE	FRONT	DEPTH	TOT LND UTS	UNIT TYPE	DT	DPTH FACT	% COND	TOT ADJ	UNIT PRICE	ADJ UNIT PRICE	LAND VALUE	OTHER ADJUSTMENTS AND NOTES	YEAR	DENSITY	DECL	FRZ	YR	CONSRV

REVIEW DATE 07/15/2022 BY RDC Total Acres: 0.00 Total Land Value: 0 Market: 0 Agricultural: 0 Common: 0 PRINTED 07/30/2025 BY SYS

PARCEL 5B-2
EAST NASSAU-WILDLIGHT PDP3/
POD 5 OR 2546/1608

EXCHANGE WILDLIGHT APRTMENTS LLC
3300 NE EXPRESSWAY BLDG 6
ATLANTA, GA 30341

2025

50-3N-27-1005-05B2-0000

NASSAU COUNTY PROPERTY

BUILDING CHARACTERISTICS

ELEMENT	CD	CONSTRUCTION
Exterior Wall	31	HARDIE BRD 100
Roof Structur	04	WOOD TRUSS 100
Roof Cover	03	COMP SHNGL 100
Interior Wall	05	DRYWALL 100
Interior Floo	13	LVT/LAMNT 70
Interior Floo	14	CARPET 30
Air Condition	03	CENTRAL 100
Heating Type	04	AIR DUCTED 100
Bedrooms		2 100
Bathrooms		2 100
Frame	02	WOOD FRAME 100
Story Height		10 100
RMS		0 100
Stories	3.	3. 100
Units		24 100
Quality	03	Quality Level 03
DOR CODE	0300	MULTI-FAMILY
MAP NUM		MKT AREA 04
NEIGHBORHOOD/LOC	4086.0200	

AREA TYPE	TOTAL GROSS AREA	PCT OF BASE	YEAR	TOT ADJ AREA	SUBAREA MARKET VALUE
BAS	2,422	100	2025	2,422	376,169
BAS	2,422	100	2025	2,422	376,169
BAS	2,422	100	2025	2,422	376,169
BAS	2,422	100	2025	2,422	376,169
BAS	2,422	100	2025	2,422	376,169
BAS	2,422	100	2025	2,422	376,169
BAS	3,009	100	2025	3,009	467,337
BAS	3,009	100	2025	3,009	467,337
BAS	3,009	100	2025	3,009	467,337
CAN	567	30	2025	170	26,403
TOTALS	28,859			25,277	3,925,847

MARKET ADJUSTMENTS

TYPE	MDL	EFF. AREA	TOT ADJ PTS	EFF. BASE RATE	REPL. COST NEW	AYB	EYB	ECON	FNCT	AP	NORM	% COND
0302	03	25,277	99.7500	172.57	4,362,052	2024	2024	0	0	10	0.00	90.00

3 APART/LUX – 0% - 2025 Heated Area: 23559 HX Base Yr

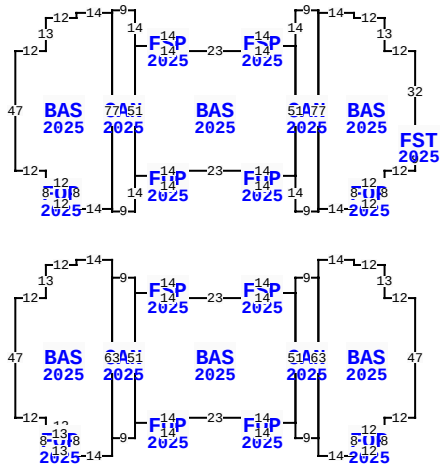

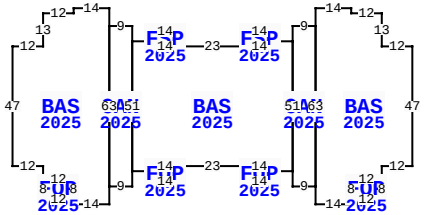

** This building has 34 Sub-Areas

549 WILDLIGHT AV, YULEE

BLD DATE	04/08/2025	REA	LGL DATE	
XF DATE			LAND DATE	05/09/2025 DC
INC DATE	07/11/2025	REA	AG DATE	

VALUATION SUMMARY

VALUATION BY	DIRECT_CAP
Tax Group: 4	Tax Dist:
BUILDING MARKET VALUE	59,291,719
TOTAL MARKET OB/XF VALUE	0
TOTAL LAND VALUE - MARKET	0
TOTAL MARKET VALUE	59,291,719
SOH/AGL Deduction	0
ASSESSED VALUE	59,291,719
TOTAL EXEMPTION VALUE	0
BASE TAXABLE VALUE	59,291,719
TOTAL JUST VALUE	59,291,719
NCON VALUE	56,908,025
INCOME VALUE	59,291,719
PREVIOUS YEAR MKT VALUE	4,500,000

PERMIT NUM	DESCRIPTION	AMT	ISSUED
CO240002177	APARTMENT BLDG 2	868,953	02/23/2024
CO240001748	CLUBHOUSE FOR APA	1,272,763	02/13/2024
SU240001330	SIGN "EXCHANGE AT	10,000	02/02/2024
230010209	POOL / POOL DECKI	250,000	08/09/2023
230003452	(6) BAY STAND - A	94,866	03/15/2023
230003457	MAINTENANCE GARAG	43,743	03/15/2023

SALES DATA

OFF RECORD Number	DATE	TYPE INST	Q / U	V / I	RSN CD	SALE PRICE
2575/0293	6/28/2022	SW	Q	V	01	4,800,000

GRANTOR: WILDLIGHT LLC

GRANTEE: EXCHANGE WILDLIGHT

BUILDING NOTES

EXTRA FEATURES

LN	OB/XF CODE	DESCRIPTION	BLD	CAP	L	W	UNITS	UT	Adj R	ADJ UNIT PRICE	ORIG COND	YEAR ON	YEAR ACTUAL	Q	% COND	OB/XF MKT VALUE	NOTES
21	0966	FIRE SPRNK	5	0	0	0	68,116.00	SF	3.00	3.00	100	2025	2024		100	204,348	
22	0966	FIRE SPRNK	3	0	0	0	23,448.00	SF	3.00	3.00	100	2025	2024		100	70,344	
23	0966	FIRE SPRNK	6	0	0	0	23,448.00	SF	3.00	3.00	100	2025	2024		100	70,344	
24	0966	FIRE SPRNK	4	0	0	0	30,077.00	SF	3.00	3.00	100	2025	2024		100	90,231	
25	0966	FIRE SPRNK	10	0	0	0	30,077.00	SF	3.00	3.00	100	2025	2024		100	90,231	
26	0966	FIRE SPRNK	11	0	0	0	30,077.00	SF	3.00	3.00	100	2025	2024		100	90,231	
27	0966	FIRE SPRNK	7	0	0	0	11,685.00	SF	3.00	3.00	100	2025	2024		100	35,055	

BUILDING DIMENSIONS

BAS=[YR=2025;LABEL=2nd FLR;ORIG=10,106] S51 E6 N2 E14 E23 E14 S2 E6 N51 W6 S2 W14 W23 W14 N2 W6 $
BAS=[YR=2025;ORIG=10,9] S51 E6 N2 E14 E23 E14 S2 E6 N51 W6 S2 W14 W23 W14 N2 W6 $
BAS=[YR=2025;LABEL=3rd FLR;ORIG=208,59] S51 E6 N2 E14 E23 E14 S2 E6 N51 W6 S2 W14 W23 W14 N2 W6 $
BAS=[YR=2025;ORIG=1,-4] S77 W14 N2 N8 W12 N5 W12 N47 E12 N13 E12 N2 E14 $
BAS=[YR=2025;LABEL=3rd FLR;ORIG=199,46] S7 S63 S7 W14 N2 N8 W12 N5 W12 N47 E12 N13 E12 N2 E14 $
BAS=[YR=2025;LABEL=2nd FLR;ORIG=1,93] S7 S63 S7 W14 N2 N8 W12 N5 W12 N47 E12 N13 E12 N2 E14 $

LAND DESCRIPTION

TOTAL OB/XF 650,784

LN	USE CODE	CLS	LAND USE DESCRIPTION	CAP	RD	LOC ZONE	FRONT	DEPTH	TOT LND UTS	UNIT TYPE	DT	DPTH FACT	% COND	TOT ADJ	UNIT PRICE	ADJ UNIT PRICE	LAND VALUE	OTHER ADJUSTMENTS AND NOTES	YEAR	DENSITY	DECL	FRZ	YR	CONSRV

REVIEW DATE 07/15/2022 BY RDC Total Acres: 0.00 Total Land Value: 0 Market: 0 Agricultural: 0 Common: 0 PRINTED 07/30/2025 BY SYS

PARCEL 5B-2
EAST NASSAU-WILDLIGHT PDP3/
POD 5 OR 2546/1608

EXCHANGE WILDLIGHT APRTMENTS LLC
3300 NE EXPRESSWAY BLDG 6
ATLANTA, GA 30341

2025

50-3N-27-1005-05B2-0000

NASSAU COUNTY PROPERTY

BUILDING CHARACTERISTICS

ELEMENT	CD	CONSTRUCTION
Exterior Wall	31	HARDIE BRD 100
Roof Structur	04	WOOD TRUSS 100
Roof Cover	03	COMP SHNGL 100
Interior Wall	05	DRYWALL 100
Interior Floo	13	LVT/LAMNT 70
Interior Floo	14	CARPET 30
Air Condition	03	CENTRAL 100
Heating Type	04	AIR DUCTED 100
Bedrooms		2 100
Bathrooms		2 100
Frame	02	WOOD FRAME 100
Story Height		10 100
RMS		0 100
Stories	3.	3. 100
Units		24 100
Quality	03	Quality Level 03
DOR CODE	0300	MULTI-FAMILY
MAP NUM		MKT AREA 04
NEIGHBORHOOD/LOC	4086.0200	

AREA TYPE	TOTAL GROSS AREA	PCT OF BASE	YEAR	TOT ADJ AREA	SUBAREA MARKET VALUE
BAS	2,383	100	2025	2,383	370,111
BAS	2,545	100	2025	2,545	395,272
BAS	3,177	100	2025	3,177	493,430
CAN	567	30	2025	170	26,403
CAN	567	30	2025	170	26,403
CAN	686	30	2025	206	31,994
CAN	686	30	2025	206	31,994
CAN	711	30	2025	213	33,081
CAN	726	30	2025	218	33,858
FOP	84	30	2025	25	3,883
TOTALS	30,268			26,312	4,086,596

MARKET ADJUSTMENTS

TYPE	MDL	EFF. AREA	TOT ADJ PTS	EFF. BASE RATE	REPL. COST NEW	AYB	EYB	ECON	FNCT	AP	NORM	% COND
0302	03	26,312	99.7500	172.57	4,540,662	2024	2024	0	0	10	0.00	90.00

4 APART/LUX – 0% - 2025 Heated Area: 24315 HX Base Yr

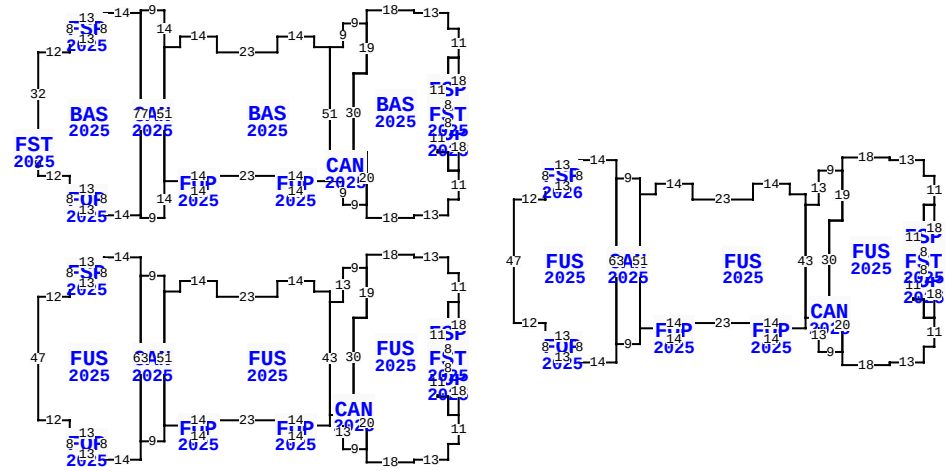

** This building has 37 Sub-Areas

549 WILDLIGHT AV, YULEE

BLD DATE	04/08/2025	REA	LGL DATE	
XF DATE			LAND DATE	05/09/2025 DC
INC DATE	07/11/2025	REA	AG DATE	

VALUATION SUMMARY

VALUATION BY	DIRECT_CAP
Tax Group: 4	Tax Dist:
BUILDING MARKET VALUE	59,291,719
TOTAL MARKET OB/XF VALUE	0
TOTAL LAND VALUE - MARKET	0
TOTAL MARKET VALUE	59,291,719
SOH/AGL Deduction	0
ASSESSED VALUE	59,291,719
TOTAL EXEMPTION VALUE	0
BASE TAXABLE VALUE	59,291,719
TOTAL JUST VALUE	59,291,719
NCON VALUE	56,908,025
INCOME VALUE	59,291,719
PREVIOUS YEAR MKT VALUE	4,500,000

PERMIT NUM	DESCRIPTION	AMT	ISSUED
230003454	BLDG 5 (597 WILDL	13,367,098	03/15/2023
230003448	BLDG 12 (637 WILD	15,119,976	03/15/2023
230003450	(6) BAY STAND - A	94,866	03/13/2023
230002360	BLDG 8 (541 WILDL	868,953	02/22/2023
230002361	CLUBHOUSE/ LEASIN	1,296,886	02/22/2023
230002362	BLDG 9 (533 WILDL	868,953	02/22/2023

SALES DATA

OFF RECORD Number	DATE	TYPE INST	Q / U	V / I	RSN CD	SALE PRICE
2575/0293	6/28/2022	SW	Q	V	01	4,800,000

GRANTOR: WILDLIGHT LLC

GRANTEE: EXCHANGE WILDLIGHT

BUILDING NOTES

EXTRA FEATURES

L N	OB/XF CODE	DESCRIPTION	BLD	CAP	L	W	UNITS	UT	Adj R	ADJ UNIT PRICE	ORIG COND	YEAR ON	YEAR ACTUAL	Q	% COND	OB/XF MKT VALUE	NOTES

BUILDING DIMENSIONS

BAS=[YR=2025;ORIG=-173,20] S51 E6 N2 E14 E23 E14 S2 E6 N51 W6 N4 W14 S6 W23 N6 W14 S4 W6 $
FUS=[YR=2025;LABEL=2nd FLR;ORIG=-173,113] S51 E6 N2 E14 E23 E14 S2 E6 N4 N43 N4 W6 N4 W14 S6 W23 N6 W14 S4 W6 $
FUS=[YR=2025;LABEL=3rd FLR;ORIG=8,76] S51 E6 N2 E14 E23 E14 S2 E6 N4 N43 N4 W6 N4 W14 S6 W23 N6 W14 S4 W6 $
BAS=[YR=2025;ORIG=-96,6] S5 S19 W5 S30 E5 S20 S5 E18 N1 E13 N6 E4 N11 W4 N7 W4 N11 N7 N11 E4 N7 E4 N11 W4 N6 W13 N1 W18 $
FUS=[YR=2025;LABEL=3rd FLR;ORIG=85,62] S5 S19 W5 S30 E5 S20 S5 E18 N1 E13 N6 E4 N11 W4 N7 W4 N11 N7 N11 E4 N7 E4 N11 W4 N6 W13 N1 W18 $
FUS=[YR=2025;LABEL=2nd FLR;ORIG=-96,99] S5 S19 W5 S30 E5 S20

LAND DESCRIPTION

TOTAL OB/XF 0

L N	USE CODE	CLS	LAND USE DESCRIPTION	CAP	R D	LOC ZONE	FRONT	DEPTH	TOT LND UTS	UNIT TYPE	D T	DPTH FACT	% COND	TOT ADJ	UNIT PRICE	ADJ UNIT PRICE	LAND VALUE	OTHER ADJUSTMENTS AND NOTES	YEAR	DENSITY	DECL	FRZ	YR	CONSRV

REVIEW DATE 07/15/2022 BY RDC Total Acres: 0.00 Total Land Value: 0 Market: 0 Agricultural: 0 Common: 0 PRINTED 07/30/2025 BY SYS

PARCEL 5B-2
EAST NASSAU-WILDLIGHT PDP3/
POD 5 OR 2546/1608

EXCHANGE WILDLIGHT APRTMENTS LLC
3300 NE EXPRESSWAY BLDG 6
ATLANTA, GA 30341

2025

50-3N-27-1005-05B2-0000

NASSAU COUNTY PROPERTY

BUILDING CHARACTERISTICS

ELEMENT	CD	CONSTRUCTION
Exterior Wall	31	HARDIE BRD 100
Roof Structur	04	WOOD TRUSS 100
Roof Cover	03	COMP SHNGL 100
Interior Wall	05	DRYWALL 100
Interior Floo	13	LVT/LAMNT 70
Interior Floo	14	CARPET 30
Air Condition	03	CENTRAL 100
Heating Type	04	AIR DUCTED 100
Bedrooms		2 100
Bathrooms		2 100
Frame	02	WOOD FRAME 100
Story Height		10 100
RMS		0 100
Stories	3.	3. 100
Units		76 100
Quality	04	Quality Level 04

DOR CODE 0300 MULTI-FAMILY
MAP NUM | MKT AREA 04
NEIGHBORHOOD/LOC 4086.0200

AREA TYPE	TOTAL GROSS AREA	PCT OF BASE	YEAR	TOT ADJ AREA	SUBAREA MARKET VALUE
BAS	951	100	2025	951	162,467
BAS	951	100	2025	951	162,467
BAS	964	100	2025	964	164,687
BAS	1,981	100	2025	1,981	338,430
BAS	3,195	100	2025	3,195	545,828
BAS	3,320	100	2025	3,320	567,182
BAS	5,500	100	2025	5,500	939,609
CAN	2,635	30	2025	790	134,962
CAN	2,635	30	2025	790	134,962
CAN	2,635	30	2025	790	134,962
TOTALS	84,632			73,521	12,560,180

MARKET ADJUSTMENTS

TYPE	MDL	EFF. AREA	TOT ADJ PTS	EFF. BASE RATE	REPL. COST NEW	AYB	EYB	ECON	FNCT	AP	NORM	% COND
0302	03	73,521	109.7250	189.82	13,955,756	2024	2024	0	0	10	0.00	90.00

5 APART/LUX - 0% - 2025 Heated Area: 67528 HX Base Yr

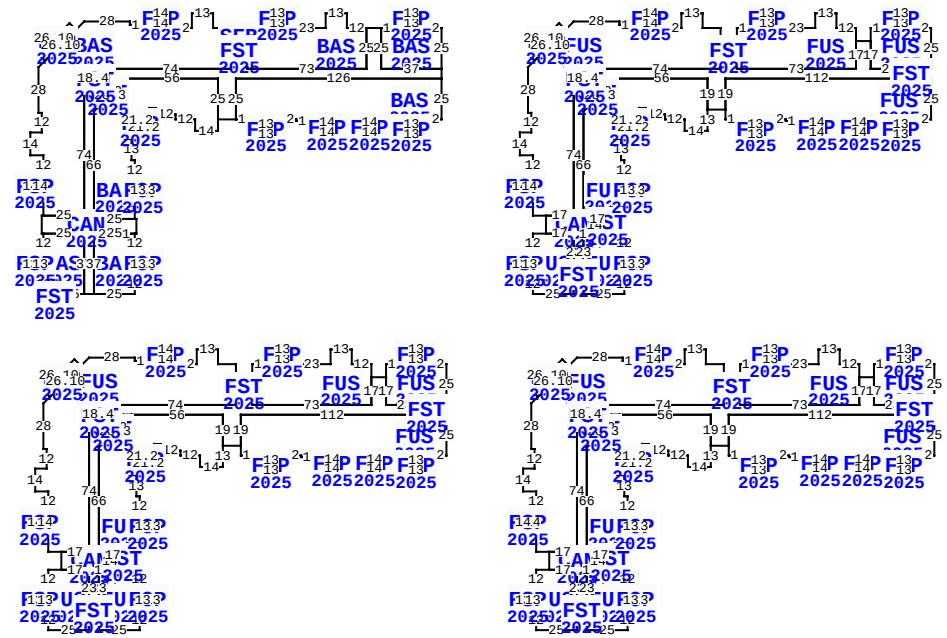

** This building has 107 Sub-Areas

549 WILDLIGHT AV, YULEE

BLD DATE	04/08/2025	REA	LGL DATE	05/09/2025	DC
XF DATE			LAND DATE		
INC DATE	07/11/2025	REA	AG DATE		

VALUATION SUMMARY

VALUATION BY	DIRECT_CAP
Tax Group: 4	Tax Dist:
BUILDING MARKET VALUE	59,291,719
TOTAL MARKET OB/XF VALUE	0
TOTAL LAND VALUE - MARKET	0
TOTAL MARKET VALUE	59,291,719
SOH/AGL Deduction	0
ASSESSED VALUE	59,291,719
TOTAL EXEMPTION VALUE	0
BASE TAXABLE VALUE	59,291,719
TOTAL JUST VALUE	59,291,719
NCON VALUE	56,908,025
INCOME VALUE	59,291,719
PREVIOUS YEAR MKT VALUE	4,500,000

PERMIT NUM	DESCRIPTION	AMT	ISSUED
230002363	BLDG 1 (557 WILDL	885,892	02/22/2023
230002364	BLDG 2 (565 WILDL	868,953	02/22/2023
230002365	BLDG 4 (581 WILDL	4,781,942	02/22/2023
230002366	BLDG 3 (573 WILDL	4,499,625	02/22/2023
230002367	BLDG 7 (613 WILDL	2,291,522	02/22/2023

SALES DATA

OFF RECORD Number	DATE	TYPE INST	Q U	V I	RSN CD	SALE PRICE
2575/0293	6/28/2022	SW	Q	V	01	4,800,000

GRANTOR: WILDLIGHT LLC
GRANTEE: EXCHANGE WILDLIGHT

BUILDING NOTES

BUILDING DIMENSIONS

BAS=[YR=2025;ORIG=-198,12] U4R4 U19R19 U5R5 E28 S2 E12 N1 E14 S3 E12 N9 E13 S9 E11 S10 S8 S7 W74 N1 W4 D13L13 S4 E1 S74 W25 N11 W2 N14 E2 N12 W8 N14 E7 N12 W2 N28 $
FUS=[YR=2025;LABEL=2nd FLR;ORIG=-195,218] U4R4 U19R19 U5R5 E28 S2 E12 N1 E14 S3 E12 N9 E13 S9 E11 S10 S8 S7 W74 N1 W4 D13L13 S4 E1 S74 W17 W8 N11 W2 N14 E2 N12 W8 N14 E7 N12 W2 N28 $
FUS=[YR=2025;LABEL=3rd FLR;ORIG=102,12] U4R4 U19R19 U5R5 E28 S2 E12 N1 E14 S3 E12 N9 E13 S9 E11 S10 S8 S7 W74 N1 W4 D13L13 S4 E1 S74 W17 W8 N11 W2 N14 E2 N12 W8 N14 E7 N12 W2 N28 $
FUS=[YR=2025;LABEL=4th FLR;ORIG=104,218] U4R4 U19R19 U5R5 E28 S2 E12 N1 E14 S3 E12 N9 E13 S9 E11 S10 S8 S7 W74 N1 W4 D13L13

EXTRA FEATURES

L N	OB/XF CODE	DESCRIPTION	BLD	CAP	L	W	UNITS	UT	Adj R	ADJ UNIT PRICE	ORIG COND	YEAR ON	YEAR ACTUAL	Q	% COND	OB/XF MKT VALUE	NOTES

LAND DESCRIPTION

TOTAL OB/XF 0

L N	USE CODE	CLS	LAND USE DESCRIPTION	CAP	R D	LOC ZONE	FRONT	DEPTH	TOT LND UTS	UNIT TYPE	D T	DPTH FACT	% COND	TOT ADJ	UNIT PRICE	ADJ UNIT PRICE	LAND VALUE	OTHER ADJUSTMENTS AND NOTES	YEAR	DENSITY	DECL	FRZ	YR	CONSRV

REVIEW DATE 07/15/2022 BY RDC Total Acres: 0.00 Total Land Value: 0 Market: 0 Agricultural: 0 Common: 0 PRINTED 07/30/2025 BY SYS

PARCEL 5B-2
EAST NASSAU-WILDLIGHT PDP3/
POD 5 OR 2546/1608

EXCHANGE WILDLIGHT APRTMENTS LLC
3300 NE EXPRESSWAY BLDG 6
ATLANTA, GA 30341

2025

50-3N-27-1005-05B2-0000

NASSAU COUNTY PROPERTY

BUILDING CHARACTERISTICS

ELEMENT	CD	CONSTRUCTION
Exterior Wall	31	HARDIE BRD 100
Roof Structur	04	WOOD TRUSS 100
Roof Cover	03	COMP SHNGL 100
Interior Wall	05	DRYWALL 100
Interior Floo	13	LVT/LAMNT 70
Interior Floo	14	CARPET 30
Air Condition	03	CENTRAL 100
Heating Type	04	AIR DUCTED 100
Bedrooms		2 100
Bathrooms		2 100
Frame	02	WOOD FRAME 100
Story Height		10 100
RMS		0 100
Stories	3.	3. 100
Units		24 100
Quality	04	Quality Level 04

DOR CODE	0300	MULTI-FAMILY	
MAP NUM		MKT AREA	04
NEIGHBORHOOD/LOC	4086.0200		

AREA TYPE	TOTAL GROSS AREA	PCT OF BASE	YEAR	TOT ADJ AREA	SUBAREA MARKET VALUE
BAS	2,422	100	2025	2,422	413,770
BAS	2,422	100	2025	2,422	413,770
BAS	2,422	100	2025	2,422	413,770
BAS	2,422	100	2025	2,422	413,770
BAS	2,422	100	2025	2,422	413,770
BAS	2,422	100	2025	2,422	413,770
BAS	3,009	100	2025	3,009	514,051
BAS	3,009	100	2025	3,009	514,051
BAS	3,009	100	2025	3,009	514,051
CAN	567	30	2025	170	29,042
TOTALS	28,859			25,151	4,296,747

MARKET ADJUSTMENTS

TYPE	MDL	EFF. AREA	TOT ADJ PTS	EFF. BASE RATE	REPL. COST NEW	AYB	EYB	ECON	FNCT	AP	NORM	% COND
0302	03	25,151	109.7250	189.82	4,774,163	2024	2024	0	0	10	0.00	90.00

6 APART/LUX – 0% - 2025 Heated Area: 23559 HX Base Yr

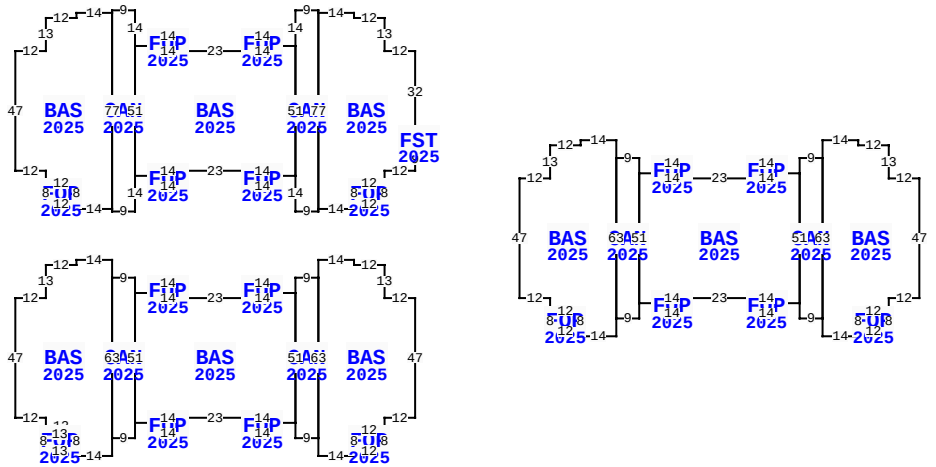

** This building has 34 Sub-Areas

549 WILDLIGHT AV, YULEE

BLD DATE	04/08/2025	REA	LGL DATE	
XF DATE			LAND DATE	05/09/2025 DC
INC DATE	07/11/2025	REA	AG DATE	

VALUATION SUMMARY

VALUATION BY	DIRECT_CAP
Tax Group: 4	Tax Dist:
BUILDING MARKET VALUE	59,291,719
TOTAL MARKET OB/XF VALUE	0
TOTAL LAND VALUE - MARKET	0
TOTAL MARKET VALUE	59,291,719
SOH/AGL Deduction	0
ASSESSED VALUE	59,291,719
TOTAL EXEMPTION VALUE	0
BASE TAXABLE VALUE	59,291,719
TOTAL JUST VALUE	59,291,719
NCON VALUE	56,908,025
INCOME VALUE	59,291,719
PREVIOUS YEAR MKT VALUE	4,500,000

PERMIT NUM	DESCRIPTION	AMT	ISSUED

SALES DATA

OFF RECORD Number	DATE	TYPE INST	Q U /	V I /	RSN CD	SALE PRICE
2575/0293	6/28/2022	SW	Q	V	01	4,800,000

GRANTOR: WILDLIGHT LLC

GRANTEE: EXCHANGE WILDLIGHT

BUILDING NOTES

BUILDING DIMENSIONS

BAS=[YR=2025;LABEL=2nd FLR;ORIG=10,106] S51 E6 N2 E14 E23 E14 S2 E6 N51 W6 S2 W14 W23 W14 N2 W6 $
BAS=[YR=2025;ORIG=10,9] S51 E6 N2 E14 E23 E14 S2 E6 N51 W6 S2 W14 W23 W14 N2 W6 $
BAS=[YR=2025;LABEL=3rd FLR;ORIG=208,59] S51 E6 N2 E14 E23 E14 S2 E6 N51 W6 S2 W14 W23 W14 N2 W6 $
BAS=[YR=2025;ORIG=1,-4] S77 W14 N2 N8 W12 N5 W12 N47 E12 N13 E12 N2 E14 $
BAS=[YR=2025;LABEL=3rd FLR;ORIG=199,46] S7 S63 S7 W14 N2 N8 W12 N5 W12 N47 E12 N13 E12 N2 E14 $
BAS=[YR=2025;LABEL=2nd FLR;ORIG=1,93] S7 S63 S7 W14 N2 N8 W12 N5 W12 N47 E12 N13 E12 N2 E14 $

EXTRA FEATURES

LN	OB/XF CODE	DESCRIPTION	BLD	CAP	L	W	UNITS	UT	Adj R	ADJ UNIT PRICE	ORIG COND	YEAR ON	YEAR ACTUAL	Q	% COND	OB/XF MKT VALUE	NOTES

LAND DESCRIPTION

TOTAL OB/XF 0

LN	USE CODE	CLS	LAND USE DESCRIPTION	CAP	RD	LOC ZONE	FRONT	DEPTH	TOT LND UTS	UNIT TYPE	DT	DPTH FACT	% COND	TOT ADJ	UNIT PRICE	ADJ UNIT PRICE	LAND VALUE	OTHER ADJUSTMENTS AND NOTES	YEAR	DENSITY	DECL	FRZ	YR	CONSRV

REVIEW DATE 07/15/2022 BY RDC Total Acres: 0.00 Total Land Value: 0 Market: 0 Agricultural: 0 Common: 0 PRINTED 07/30/2025 BY SYS

PARCEL 5B-2
EAST NASSAU-WILDLIGHT PDP3/
POD 5 OR 2546/1608

EXCHANGE WILDLIGHT APRTMENTS LLC
3300 NE EXPRESSWAY BLDG 6
ATLANTA, GA 30341

2025

50-3N-27-1005-05B2-0000

BUILDING CHARACTERISTICS

ELEMENT	CD	CONSTRUCTION
Exterior Wall	31	HARDIE BRD 100
Roof Structur	04	WOOD TRUSS 100
Roof Cover	03	COMP SHNGL 100
Interior Wall	05	DRYWALL 100
Interior Floo	13	LVT/LAMNT 70
Interior Floo	14	CARPET 30
Air Condition	03	CENTRAL 100
Heating Type	04	AIR DUCTED 100
Bedrooms		2 100
Bathrooms		2 100
Frame	02	WOOD FRAME 100
Story Height		10 100
RMS		0 100
Stories	3.	3. 100
Units		24 100
Quality	04	Quality Level 04

DOR CODE 0300 MULTI-FAMILY
MAP NUM | MKT AREA 04
NEIGHBORHOOD/LOC 4086.0200

AREA TYPE	TOTAL GROSS AREA	PCT OF BASE	YEAR	TOT ADJ AREA	SUBAREA MARKET VALUE
BAS	1,534	100	2025	1,534	270,349
BAS	1,534	100	2025	1,534	270,349
BAS	2,358	100	2025	2,358	415,570
CAN	549	30	2025	165	29,079
CAN	549	30	2025	165	29,079
CAN	713	30	2025	214	37,715
FOP	84	30	2025	25	4,406
FOP	84	30	2025	25	4,406
FOP	84	30	2025	25	4,406
FOP	104	30	2025	31	5,463
TOTALS	14,387			12,494	2,201,918

MARKET ADJUSTMENTS

TYPE	MDL	EFF. AREA	TOT ADJ PTS	EFF. BASE RATE	REPL. COST NEW	AYB	EYB	ECON	FNCT	AP	NORM	% COND
0302	03	12,494	113.1900	195.82	2,446,575	2024	2024	0	0	10	0.00	90.00

7 APART/LUX – 0% - 2025 Heated Area: 11676 HX Base Yr

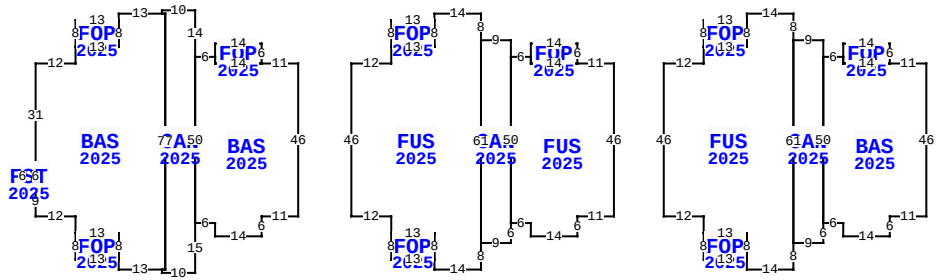

** This building has 19 Sub-Areas

549 WILDLIGHT AV, YULEE

BLD DATE	04/08/2025	REA	LGL DATE	05/09/2025	DC
XF DATE			LAND DATE		
INC DATE	07/11/2025	REA	AG DATE		

NASSAU COUNTY PROPERTY

VALUATION SUMMARY

VALUATION BY	DIRECT_CAP
Tax Group: 4	Tax Dist:
BUILDING MARKET VALUE	59,291,719
TOTAL MARKET OB/XF VALUE	0
TOTAL LAND VALUE - MARKET	0
TOTAL MARKET VALUE	59,291,719
SOH/AGL Deduction	0
ASSESSED VALUE	59,291,719
TOTAL EXEMPTION VALUE	0
BASE TAXABLE VALUE	59,291,719
TOTAL JUST VALUE	59,291,719
NCON VALUE	56,908,025
INCOME VALUE	59,291,719
PREVIOUS YEAR MKT VALUE	4,500,000

PERMIT NUM	DESCRIPTION	AMT	ISSUED

SALES DATA

OFF RECORD Number	DATE	TYPE INST	Q / U	V / I	RSN CD	SALE PRICE
2575/0293	6/28/2022	SW	Q	V	01	4,800,000

GRANTOR: WILDLIGHT LLC
GRANTEE: EXCHANGE WILDLIGHT

BUILDING NOTES

BUILDING DIMENSIONS

BAS=[YR=2025;ORIG=-10,-40] S2 S8 W13 S5 W12 S31 S6 S9 E12 S5 E13 S8 S3 E13 E1 N77 W1 W13 $
FUS=[YR=2025;LABEL=2nd FLR;ORIG=85,-40] S2 S8 W13 S5 W12 S46 E12 S5 E13 S8 S3 E14 N8 N61 N8 W14 $
FUS=[YR=2025;LABEL=3rd FLR;ORIG=179,-40] S2 S8 W13 S5 W12 S46 E12 S5 E13 S8 S3 E14 N8 N61 N8 W14 $
BAS=[YR=2025;ORIG=13,-27] S50 E6 S4 E14 N6 E11 N46 W11 W14 N2 W6 $
BAS=[YR=2025;LABEL=3rd FLR;ORIG=202,-27] S50 E6 S4 E14 N6 E11 N46 W11 W14 N2 W6 $
FUS=[YR=2025;LABEL=2nd FLR;ORIG=108,-27] S50 E6 S4 E14 N6 E11 N46 W11 W14 N2 W6 $

EXTRA FEATURES

L N	OB/XF CODE	DESCRIPTION	BLD	CAP	L	W	UNITS	UT	Adj R	ADJ UNIT PRICE	ORIG COND	YEAR ON	YEAR ACTUAL	Q	% COND	OB/XF MKT VALUE	NOTES

LAND DESCRIPTION

TOTAL OB/XF 0

L N	USE CODE	CLS	LAND USE DESCRIPTION	CAP	R D	LOC ZONE	FRONT	DEPTH	TOT LND UTS	UNIT TYPE	D T	DPTH FACT	% COND	TOT ADJ	UNIT PRICE	ADJ UNIT PRICE	LAND VALUE	OTHER ADJUSTMENTS AND NOTES	YEAR	DENSITY	DECL	FRZ	YR	CONSRV

REVIEW DATE 07/15/2022 BY RDC Total Acres: 0.00 Total Land Value: 0 Market: 0 Agricultural: 0 Common: 0 PRINTED 07/30/2025 BY SYS

PARCEL 5B-2
EAST NASSAU-WILDLIGHT PDP3/
POD 5 OR 2546/1608

EXCHANGE WILDLIGHT APRTMENTS LLC
3300 NE EXPRESSWAY BLDG 6
ATLANTA, GA 30341

2025

50-3N-27-1005-05B2-0000

NASSAU COUNTY PROPERTY

BUILDING CHARACTERISTICS

ELEMENT	CD	CONSTRUCTION
Exterior Wall	31	HARDIE BRD 100
Roof Structur	04	WOOD TRUSS 100
Roof Cover	03	COMP SHNGL 100
Interior Wall	05	DRYWALL 100
Interior Floo	13	LVT/LAMNT 70
Interior Floo	14	CARPET 30
Air Condition	03	CENTRAL 100
Heating Type	04	AIR DUCTED 100
Bedrooms		2 100
Bathrooms		2 100
Frame	02	WOOD FRAME 100
Story Height		10 100
RMS		0 100
Stories	2.	2. 100
Units		2 100
Quality	04	Quality Level 04

DOR CODE 0300 MULTI-FAMILY
MAP NUM | MKT AREA 04
NEIGHBORHOOD/LOC 4086.0200

AREA TYPE	TOTAL GROSS AREA	PCT OF BASE	YEAR	TOT ADJ AREA	SUBAREA MARKET VALUE
CAN	84	30	2025	25	4,586
CAN	84	30	2025	25	4,586
CAN	168	30	2025	50	9,172
CAN	208	30	2025	62	11,372
FGR	288	55	2025	158	28,982
FGR	288	55	2025	158	28,982
FGR	288	55	2025	158	28,982
FGR	288	55	2025	158	28,982
FGR	312	55	2025	172	31,550
FGR	312	55	2025	172	31,550
TOTALS	5,578			4,037	740,503

MARKET ADJUSTMENTS

TYPE	MDL	EFF. AREA	TOT ADJ PTS	EFF. BASE RATE	REPL. COST NEW	AYB	EYB	ECON	FNCT	AP	NORM	% COND
0302	03	4,037	117.8100	203.81	822,781	2024	2024	0	0	10	0.00	90.00

8 APART/LUX – 0% - 2025 Heated Area: 2508 HX Base Yr

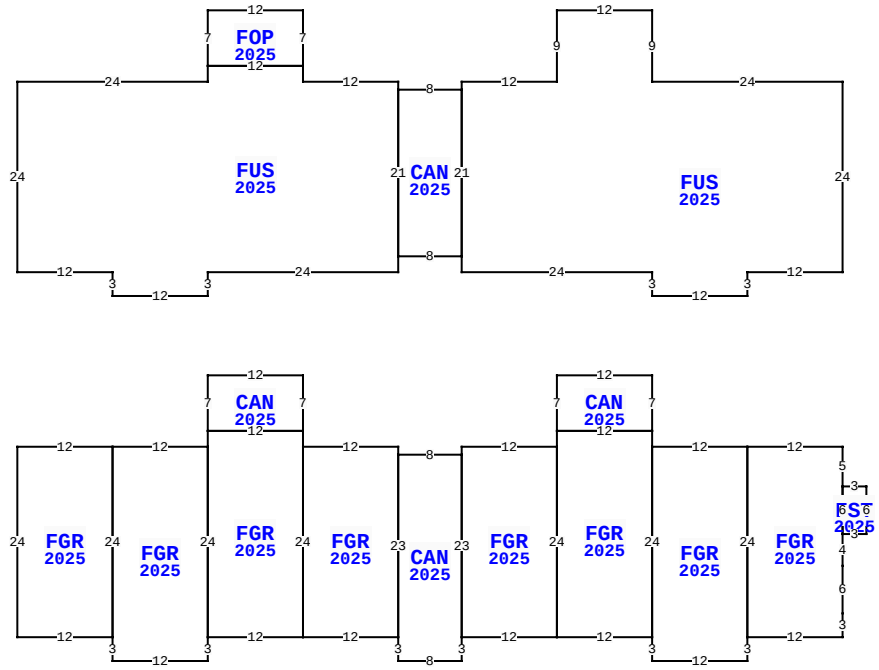

** This building has 16 Sub-Areas

549 WILDLIGHT AV, YULEE

BLD DATE	04/08/2025	REA	LGL DATE	05/09/2025	DC
XF DATE			LAND DATE		
INC DATE	07/11/2025	REA	AG DATE		

VALUATION SUMMARY

VALUATION BY	DIRECT_CAP
Tax Group: 4	Tax Dist:
BUILDING MARKET VALUE	59,291,719
TOTAL MARKET OB/XF VALUE	0
TOTAL LAND VALUE - MARKET	0
TOTAL MARKET VALUE	59,291,719
SOH/AGL Deduction	0
ASSESSED VALUE	59,291,719
TOTAL EXEMPTION VALUE	0
BASE TAXABLE VALUE	59,291,719
TOTAL JUST VALUE	59,291,719
NCON VALUE	56,908,025
INCOME VALUE	59,291,719
PREVIOUS YEAR MKT VALUE	4,500,000

PERMIT NUM	DESCRIPTION	AMT	ISSUED

SALES DATA

OFF RECORD Number	DATE	TYPE INST	Q / U	V / I	RSN CD	SALE PRICE
2575/0293	6/28/2022	SW	Q	V	01	4,800,000

GRANTOR: WILDLIGHT LLC
GRANTEE: EXCHANGE WILDLIGHT

BUILDING NOTES

EXTRA FEATURES

LN	OB/XF CODE	DESCRIPTION	BLD	CAP	L	W	UNITS	UT	Adj R	ADJ UNIT PRICE	ORIG COND	YEAR ON	YEAR ACTUAL	Q	% COND	OB/XF MKT VALUE	NOTES

BUILDING DIMENSIONS

FUS=[YR=2025;ORIG=134,10] W24 N9 W12 S9 W12 S1 S21 S2 E24 S3 E12 N3 E12 N24 $
FUS=[YR=2025;ORIG=30,10] E24 N2 E12 S2 E12 S1 S21 S2 W24 S3 W12 N3 W12 N24 $
FGR=[YR=2025;ORIG=42,56] E12 S24 S3 W12 N3 N24 $
FGR=[YR=2025;ORIG=110,56] E12 S24 S3 W12 N3 N24 $
FGR=[YR=2025;ORIG=54,54] E12 S2 S24 W12 N24 N2 $
FGR=[YR=2025;ORIG=98,54] E12 S2 S24 W12 N24 N2 $
FGR=[YR=2025;ORIG=30,56] E12 S24 W12 N24 $
FGR=[YR=2025;ORIG=122,56] E12 S5 S6 S4 S6 S3 W12 N24 $
FGR=[YR=2025;ORIG=66,56] E12 S1 S23 W12 N24 $
FGR=[YR=2025;ORIG=98,56] W12 S1 S23 E12 N24 $

LAND DESCRIPTION

TOTAL OB/XF 0

LN	USE CODE	CLS	LAND USE DESCRIPTION	CAP	RD	LOC ZONE	FRONT	DEPTH	TOT LND UTS	UNIT TYPE	DT	DPTH FACT	% COND	TOT ADJ	UNIT PRICE	ADJ UNIT PRICE	LAND VALUE	OTHER ADJUSTMENTS AND NOTES	YEAR	DENSITY	DECL	FRZ	YR	CONSRV

REVIEW DATE 07/15/2022 BY RDC Total Acres: 0.00 Total Land Value: 0 Market: 0 Agricultural: 0 Common: 0 PRINTED 07/30/2025 BY SYS

PARCEL 5B-2
EAST NASSAU-WILDLIGHT PDP3/
POD 5 OR 2546/1608

EXCHANGE WILDLIGHT APRTMENTS LLC
3300 NE EXPRESSWAY BLDG 6
ATLANTA, GA 30341

2025

50-3N-27-1005-05B2-0000

NASSAU COUNTY PROPERTY

BUILDING CHARACTERISTICS

ELEMENT	CD	CONSTRUCTION
Exterior Wall	31	HARDIE BRD 100
Roof Structur	04	WOOD TRUSS 100
Roof Cover	03	COMP SHNGL 100
Interior Wall	05	DRYWALL 100
Interior Floo	13	LVT/LAMNT 70
Interior Floo	14	CARPET 30
Air Condition	03	CENTRAL 100
Heating Type	04	AIR DUCTED 100
Bedrooms		2 100
Bathrooms		2 100
Frame	02	WOOD FRAME 100
Story Height		10 100
RMS		0 100
Stories	2.	2. 100
Units		2 100
Quality	04	Quality Level 04

DOR CODE 0300 MULTI-FAMILY
MAP NUM | MKT AREA 04
NEIGHBORHOOD/LOC 4086.0200

AREA TYPE	TOTAL GROSS AREA	PCT OF BASE	YEAR	TOT ADJ AREA	SUBAREA MARKET VALUE
CAN	84	30	2025	25	4,586
CAN	84	30	2025	25	4,586
CAN	168	30	2025	50	9,172
CAN	208	30	2025	62	11,372
FGR	288	55	2025	158	28,982
FGR	288	55	2025	158	28,982
FGR	288	55	2025	158	28,982
FGR	288	55	2025	158	28,982
FGR	312	55	2025	172	31,550
FGR	312	55	2025	172	31,550
TOTALS	5,578			4,037	740,503

MARKET ADJUSTMENTS

TYPE	MDL	EFF. AREA	TOT ADJ PTS	EFF. BASE RATE	REPL. COST NEW	AYB	EYB	ECON	FNCT	AP	NORM	% COND
0302	03	4,037	117.8100	203.81	822,781	2024	2024	0	0	10	0.00	90.00

9 APART/LUX – 0% - 2025 Heated Area: 2508 HX Base Yr

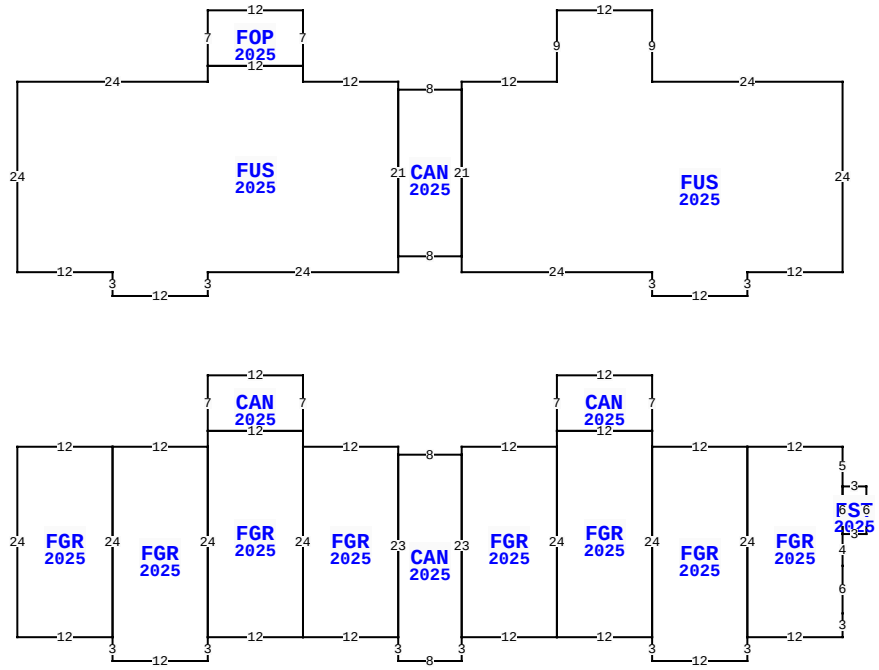

** This building has 16 Sub-Areas

549 WILDLIGHT AV, YULEE

BLD DATE	04/08/2025	REA	LGL DATE	05/09/2025	DC
XF DATE			LAND DATE		
INC DATE	07/11/2025	REA	AG DATE		

VALUATION SUMMARY

VALUATION BY	DIRECT_CAP
Tax Group: 4	Tax Dist:
BUILDING MARKET VALUE	59,291,719
TOTAL MARKET OB/XF VALUE	0
TOTAL LAND VALUE - MARKET	0
TOTAL MARKET VALUE	59,291,719
SOH/AGL Deduction	0
ASSESSED VALUE	59,291,719
TOTAL EXEMPTION VALUE	0
BASE TAXABLE VALUE	59,291,719
TOTAL JUST VALUE	59,291,719
NCON VALUE	56,908,025
INCOME VALUE	59,291,719
PREVIOUS YEAR MKT VALUE	4,500,000

PERMIT NUM	DESCRIPTION	AMT	ISSUED

SALES DATA

OFF RECORD Number	DATE	TYPE INST	Q / U	V / I	RSN CD	SALE PRICE
2575/0293	6/28/2022	SW	Q	V	01	4,800,000

GRANTOR: WILDLIGHT LLC
GRANTEE: EXCHANGE WILDLIGHT

BUILDING NOTES

EXTRA FEATURES

LN	OB/XF CODE	DESCRIPTION	BLD	CAP	L	W	UNITS	UT	Adj R	ADJ UNIT PRICE	ORIG COND	YEAR ON	YEAR ACTUAL	Q	% COND	OB/XF MKT VALUE	NOTES

BUILDING DIMENSIONS

FUS=[YR=2025;ORIG=134,10] W24 N9 W12 S9 W12 S1 S21 S2 E24 S3 E12 N3 E12 N24 $
FUS=[YR=2025;ORIG=30,10] E24 N2 E12 S2 E12 S1 S21 S2 W24 S3 W12 N3 W12 N24 $
FGR=[YR=2025;ORIG=42,56] E12 S24 S3 W12 N3 N24 $
FGR=[YR=2025;ORIG=110,56] E12 S24 S3 W12 N3 N24 $
FGR=[YR=2025;ORIG=54,54] E12 S2 S24 W12 N24 N2 $
FGR=[YR=2025;ORIG=98,54] E12 S2 S24 W12 N24 N2 $
FGR=[YR=2025;ORIG=30,56] E12 S24 W12 N24 $
FGR=[YR=2025;ORIG=122,56] E12 S5 S6 S4 S6 S3 W12 N24 $
FGR=[YR=2025;ORIG=66,56] E12 S1 S23 W12 N24 $
FGR=[YR=2025;ORIG=98,56] W12 S1 S23 E12 N24 $

LAND DESCRIPTION

TOTAL OB/XF 0

LN	USE CODE	CLS	LAND USE DESCRIPTION	CAP	RD	LOC ZONE	FRONT	DEPTH	TOT LND UTS	UNIT TYPE	DT	DPTH FACT	% COND	TOT ADJ	UNIT PRICE	ADJ UNIT PRICE	LAND VALUE	OTHER ADJUSTMENTS AND NOTES	YEAR	DENSITY	DECL	FRZ	YR	CONSRV

REVIEW DATE 07/15/2022 BY RDC Total Acres: 0.00 Total Land Value: 0 Market: 0 Agricultural: 0 Common: 0 PRINTED 07/30/2025 BY SYS

PARCEL 5B-2
EAST NASSAU-WILDLIGHT PDP3/
POD 5 OR 2546/1608

EXCHANGE WILDLIGHT APRTMENTS LLC
3300 NE EXPRESSWAY BLDG 6
ATLANTA, GA 30341

2025

50-3N-27-1005-05B2-0000

NASSAU COUNTY PROPERTY

BUILDING CHARACTERISTICS

ELEMENT	CD	CONSTRUCTION
Exterior Wall	31	HARDIE BRD 100
Roof Structur	04	WOOD TRUSS 100
Roof Cover	03	COMP SHNGL 100
Interior Wall	05	DRYWALL 100
Interior Floo	13	LVT/LAMNT 70
Interior Floo	14	CARPET 30
Air Condition	03	CENTRAL 100
Heating Type	04	AIR DUCTED 100
Bedrooms		2 100
Bathrooms		2 100
Frame	02	WOOD FRAME 100
Story Height		10 100
RMS		0 100
Stories	3.	3. 100
Units		24 100
Quality	04	Quality Level 04

DOR CODE 0300 MULTI-FAMILY
MAP NUM | MKT AREA 04
NEIGHBORHOOD/LOC 4086.0200

AREA TYPE	TOTAL GROSS AREA	PCT OF BASE	YEAR	TOT ADJ AREA	SUBAREA MARKET VALUE
BAS	2,383	100	2025	2,383	407,107
BAS	2,545	100	2025	2,545	434,783
BAS	3,177	100	2025	3,177	542,752
CAN	567	30	2025	170	29,042
CAN	567	30	2025	170	29,042
CAN	686	30	2025	206	35,193
CAN	686	30	2025	206	35,193
CAN	711	30	2025	213	36,389
CAN	726	30	2025	218	37,243
FOP	84	30	2025	25	4,271
TOTALS	30,268			26,312	4,495,090

MARKET ADJUSTMENTS

TYPE	MDL	EFF. AREA	TOT ADJ PTS	EFF. BASE RATE	REPL. COST NEW	AYB	EYB	ECON	FNCT	AP	NORM	% COND
0302	03	26,312	109.7250	189.82	4,994,544	2024	2024	0	0	10	0.00	90.00

10 APART/LUX - 0% - 2025 Heated Area: 24315 HX Base Yr

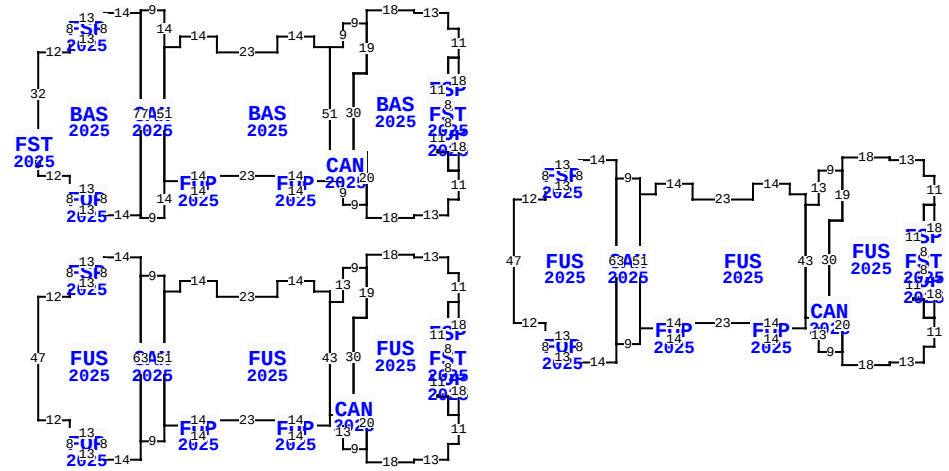

** This building has 37 Sub-Areas

549 WILDLIGHT AV, YULEE

BLD DATE	04/08/2025	REA	LGL DATE	05/09/2025	DC
XF DATE			LAND DATE		
INC DATE	07/11/2025	REA	AG DATE		

VALUATION SUMMARY

VALUATION BY	DIRECT_CAP
Tax Group: 4	Tax Dist:
BUILDING MARKET VALUE	59,291,719
TOTAL MARKET OB/XF VALUE	0
TOTAL LAND VALUE - MARKET	0
TOTAL MARKET VALUE	59,291,719
SOH/AGL Deduction	0
ASSESSED VALUE	59,291,719
TOTAL EXEMPTION VALUE	0
BASE TAXABLE VALUE	59,291,719
TOTAL JUST VALUE	59,291,719
NCON VALUE	56,908,025
INCOME VALUE	59,291,719
PREVIOUS YEAR MKT VALUE	4,500,000

PERMIT NUM	DESCRIPTION	AMT	ISSUED

SALES DATA

OFF RECORD Number	DATE	TYPE INST	Q / U	V / I	RSN CD	SALE PRICE
2575/0293	6/28/2022	SW	Q	V	01	4,800,000

GRANTOR: WILDLIGHT LLC
GRANTEE: EXCHANGE WILDLIGHT

BUILDING NOTES

BUILDING DIMENSIONS

BAS=[YR=2025;ORIG=-173,20] S51 E6 N2 E14 E23 E14 S2 E6 N51 W6 N4 W14 S6 W23 N6 W14 S4 W6 $
FUS=[YR=2025;LABEL=2nd FLR;ORIG=-173,113] S51 E6 N2 E14 E23 E14 S2 E6 N4 N43 N4 W6 N4 W14 S6 W23 N6 W14 S4 W6 $
FUS=[YR=2025;LABEL=3rd FLR;ORIG=8,76] S51 E6 N2 E14 E23 E14 S2 E6 N4 N43 N4 W6 N4 W14 S6 W23 N6 W14 S4 W6 $
BAS=[YR=2025;ORIG=-96,6] S5 S19 W5 S30 E5 S20 S5 E18 N1 E13 N6 E4 N11 W4 N7 W4 N11 N7 N11 E4 N7 E4 N11 W4 N6 W13 N1 W18 $
FUS=[YR=2025;LABEL=3rd FLR;ORIG=85,62] S5 S19 W5 S30 E5 S20 S5 E18 N1 E13 N6 E4 N11 W4 N7 W4 N11 N7 N11 E4 N7 E4 N11 W4 N6 W13 N1 W18 $
FUS=[YR=2025;LABEL=2nd FLR;ORIG=-96,99] S5 S19 W5 S30 E5 S20

EXTRA FEATURES

LN	OB/XF CODE	DESCRIPTION	BLD	CAP	L	W	UNITS	UT	Adj R	ADJ UNIT PRICE	ORIG COND	YEAR ON	YEAR ACTUAL	Q	% COND	OB/XF MKT VALUE	NOTES

LAND DESCRIPTION

TOTAL OB/XF 0

LN	USE CODE	CLS	LAND USE DESCRIPTION	CAP	RD	LOC ZONE	FRONT	DEPTH	TOT LND UTS	UNIT TYPE	DT	DPTH FACT	% COND	TOT ADJ	UNIT PRICE	ADJ UNIT PRICE	LAND VALUE	OTHER ADJUSTMENTS AND NOTES	YEAR	DENSITY	DECL	FRZ	YR	CONSRV

REVIEW DATE 07/15/2022 BY RDC Total Acres: 0.00 Total Land Value: 0 Market: 0 Agricultural: 0 Common: 0 PRINTED 07/30/2025 BY SYS

PARCEL 5B-2
EAST NASSAU-WILDLIGHT PDP3/
POD 5 OR 2546/1608

EXCHANGE WILDLIGHT APRTMENTS LLC
3300 NE EXPRESSWAY BLDG 6
ATLANTA, GA 30341

2025

50-3N-27-1005-05B2-0000

NASSAU COUNTY PROPERTY

BUILDING CHARACTERISTICS

ELEMENT	CD	CONSTRUCTION
Exterior Wall	31	HARDIE BRD 100
Roof Structur	04	WOOD TRUSS 100
Roof Cover	03	COMP SHNGL 100
Interior Wall	05	DRYWALL 100
Interior Floo	13	LVT/LAMNT 70
Interior Floo	14	CARPET 30
Air Condition	03	CENTRAL 100
Heating Type	04	AIR DUCTED 100
Bedrooms		2 100
Bathrooms		2 100
Frame	02	WOOD FRAME 100
Story Height		10 100
RMS		0 100
Stories	3.	3. 100
Units		24 100
Quality	04	Quality Level 04

DOR CODE 0300 MULTI-FAMILY
MAP NUM | MKT AREA 04
NEIGHBORHOOD/LOC 4086.0200

AREA TYPE	TOTAL GROSS AREA	PCT OF BASE	YEAR	TOT ADJ AREA	SUBAREA MARKET VALUE
BAS	2,383	100	2025	2,383	407,107
BAS	2,545	100	2025	2,545	434,783
BAS	3,177	100	2025	3,177	542,752
CAN	567	30	2025	170	29,042
CAN	567	30	2025	170	29,042
CAN	686	30	2025	206	35,193
CAN	686	30	2025	206	35,193
CAN	711	30	2025	213	36,389
CAN	726	30	2025	218	37,243
FOP	84	30	2025	25	4,271
TOTALS	30,268			26,312	4,495,090

MARKET ADJUSTMENTS

TYPE	MDL	EFF. AREA	TOT ADJ PTS	EFF. BASE RATE	REPL. COST NEW	AYB	EYB	ECON	FNCT	AP	NORM	% COND
0302	03	26,312	109.7250	189.82	4,994,544	2024	2024	0	0	10	0.00	90.00

11 APART/LUX - 0% - 2025 Heated Area: 24315 HX Base Yr

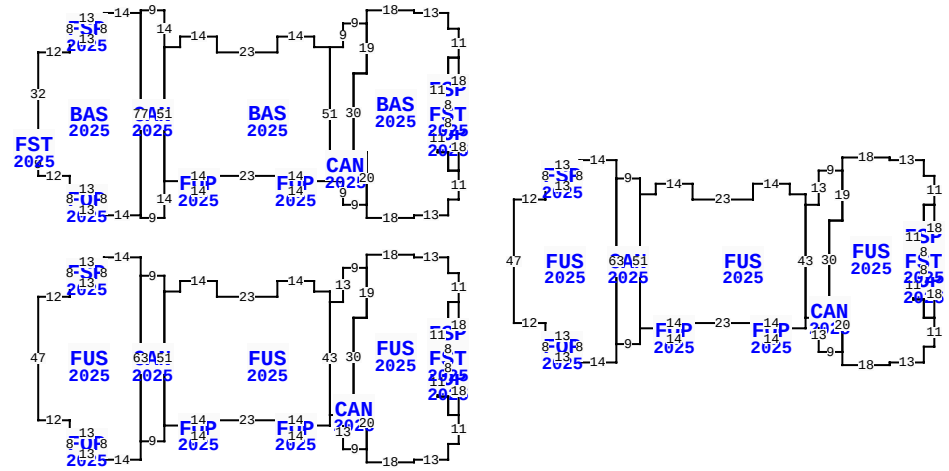

** This building has 37 Sub-Areas

549 WILDLIGHT AV, YULEE

BLD DATE	04/08/2025	REA	LGL DATE	05/09/2025	DC
XF DATE			LAND DATE		
INC DATE	07/11/2025	REA	AG DATE		

VALUATION SUMMARY

VALUATION BY	DIRECT_CAP
Tax Group: 4	Tax Dist:
BUILDING MARKET VALUE	59,291,719
TOTAL MARKET OB/XF VALUE	0
TOTAL LAND VALUE - MARKET	0
TOTAL MARKET VALUE	59,291,719
SOH/AGL Deduction	0
ASSESSED VALUE	59,291,719
TOTAL EXEMPTION VALUE	0
BASE TAXABLE VALUE	59,291,719
TOTAL JUST VALUE	59,291,719
NCON VALUE	56,908,025
INCOME VALUE	59,291,719
PREVIOUS YEAR MKT VALUE	4,500,000

PERMIT NUM	DESCRIPTION	AMT	ISSUED

SALES DATA

OFF RECORD Number	DATE	TYPE INST	Q / U	V / I	RSN CD	SALE PRICE
2575/0293	6/28/2022	SW	Q	V	01	4,800,000

GRANTOR: WILDLIGHT LLC
GRANTEE: EXCHANGE WILDLIGHT

BUILDING NOTES

EXTRA FEATURES

LN	OB/XF CODE	DESCRIPTION	BLD	CAP	L	W	UNITS	UT	Adj R	ADJ UNIT PRICE	ORIG COND	YEAR ON	YEAR ACTUAL	Q	% COND	OB/XF MKT VALUE	NOTES

BUILDING DIMENSIONS

BAS=[YR=2025;ORIG=-173,20] S51 E6 N2 E14 E23 E14 S2 E6 N51 W6 N4 W14 S6 W23 N6 W14 S4 W6 $
FUS=[YR=2025;LABEL=2nd FLR;ORIG=-173,113] S51 E6 N2 E14 E23 E14 S2 E6 N4 N43 N4 W6 N4 W14 S6 W23 N6 W14 S4 W6 $
FUS=[YR=2025;LABEL=3rd FLR;ORIG=8,76] S51 E6 N2 E14 E23 E14 S2 E6 N4 N43 N4 W6 N4 W14 S6 W23 N6 W14 S4 W6 $
BAS=[YR=2025;ORIG=-96,6] S5 S19 W5 S30 E5 S20 S5 E18 N1 E13 N6 E4 N11 W4 N7 W4 N11 N7 N11 E4 N7 E4 N11 W4 N6 W13 N1 W18 $
FUS=[YR=2025;LABEL=3rd FLR;ORIG=85,62] S5 S19 W5 S30 E5 S20 S5 E18 N1 E13 N6 E4 N11 W4 N7 W4 N11 N7 N11 E4 N7 E4 N11 W4 N6 W13 N1 W18 $
FUS=[YR=2025;LABEL=2nd FLR;ORIG=-96,99] S5 S19 W5 S30 E5 S20

LAND DESCRIPTION

TOTAL OB/XF 0

LN	USE CODE	CLS	LAND USE DESCRIPTION	CAP	RD	LOC ZONE	FRONT	DEPTH	TOT LND UTS	UNIT TYPE	DT	DPTH FACT	% COND	TOT ADJ	UNIT PRICE	ADJ UNIT PRICE	LAND VALUE	OTHER ADJUSTMENTS AND NOTES	YEAR	DENSITY	DECL	FRZ	YR	CONSRV

REVIEW DATE 07/15/2022 BY RDC Total Acres: 0.00 Total Land Value: 0 Market: 0 Agricultural: 0 Common: 0 PRINTED 07/30/2025 BY SYS

PARCEL 5B-2
EAST NASSAU-WILDLIGHT PDP3/
POD 5 OR 2546/1608

EXCHANGE WILDLIGHT APRTMENTS LLC
3300 NE EXPRESSWAY BLDG 6
ATLANTA, GA 30341

2025

50-3N-27-1005-05B2-0000

NASSAU COUNTY PROPERTY

BUILDING CHARACTERISTICS

ELEMENT	CD	CONSTRUCTION
Exterior Wall	31	HARDIE BRD 100
Roof Structur	04	WOOD TRUSS 100
Roof Cover	03	COMP SHNGL 100
Interior Wall	05	DRYWALL 100
Interior Floo	13	LVT/LAMNT 70
Interior Floo	14	CARPET 30
Air Condition	03	CENTRAL 100
Heating Type	04	AIR DUCTED 100
Bedrooms		2 100
Bathrooms		2 100
Frame	02	WOOD FRAME 100
Story Height		10 100
RMS		0 100
Stories	3.	3. 100
Units		84 100
Quality	04	Quality Level 04
DOR CODE	0300	MULTI-FAMILY
MAP NUM		MKT AREA 04
NEIGHBORHOOD/LOC	4086.0200	

AREA TYPE	TOTAL GROSS AREA	PCT OF BASE	YEAR	TOT ADJ AREA	SUBAREA MARKET VALUE
BAS	964	100	2025	964	164,687
BAS	1,255	100	2025	1,255	214,402
BAS	1,363	100	2025	1,363	232,853
BAS	2,005	100	2025	2,005	342,530
BAS	2,005	100	2025	2,005	342,530
BAS	2,005	100	2025	2,005	342,530
BAS	2,005	100	2025	2,005	342,530
BAS	3,384	100	2025	3,384	578,116
BAS	4,121	100	2025	4,121	704,023
BAS	6,426	100	2025	6,426	1,097,805
TOTALS	95,727			84,255	14,393,956

MARKET ADJUSTMENTS

TYPE	MDL	EFF. AREA	TOT ADJ PTS	EFF. BASE RATE	REPL. COST NEW	AYB	EYB	ECON	FNCT	AP	NORM	% COND
0302	03	84,255	109.7250	189.82	15,993,284	2024	2024	0	0	10	0.00	90.00

12 APART/LUX - 0% - 2025 Heated Area: 78152 HX Base Yr

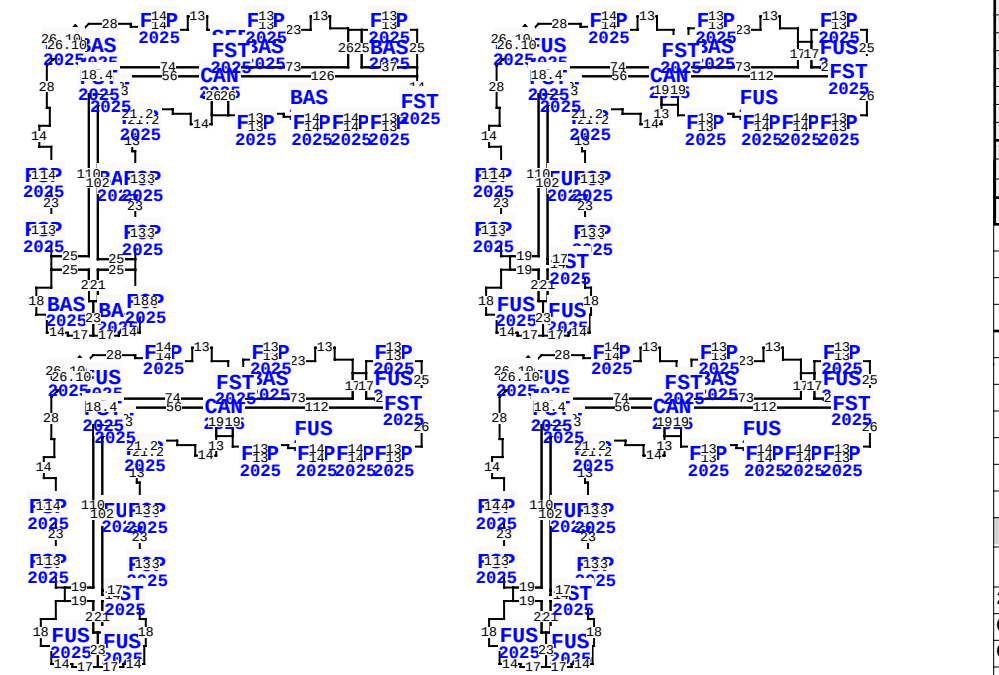

** This building has 105 Sub-Areas

549 WILDLIGHT AV, YULEE

BLD DATE	04/08/2025	REA	LGL DATE	05/09/2025	DC
XF DATE			LAND DATE		
INC DATE	07/11/2025	REA	AG DATE		

VALUATION SUMMARY

VALUATION BY	DIRECT_CAP
Tax Group: 4	Tax Dist:
BUILDING MARKET VALUE	59,291,719
TOTAL MARKET OB/XF VALUE	0
TOTAL LAND VALUE - MARKET	0
TOTAL MARKET VALUE	59,291,719
SOH/AGL Deduction	0
ASSESSED VALUE	59,291,719
TOTAL EXEMPTION VALUE	0
BASE TAXABLE VALUE	59,291,719
TOTAL JUST VALUE	59,291,719
NCON VALUE	56,908,025
INCOME VALUE	59,291,719
PREVIOUS YEAR MKT VALUE	4,500,000

PERMIT NUM	DESCRIPTION	AMT	ISSUED

SALES DATA

OFF RECORD Number	DATE	TYPE INST	Q / U	V / I	RSN CD	SALE PRICE
2575/0293	6/28/2022	SW	Q	V	01	4,800,000

GRANTOR: WILDLIGHT LLC

GRANTEE: EXCHANGE WILDLIGHT

BUILDING NOTES

BUILDING DIMENSIONS

BAS=[YR=2025;ORIG=-198,-3] U4R4 U19R19 U5R5 E28 S2 E12 N1 E14 S3 E12 N9 E13 S9 E11 S10 S8 S7 W74 N1 W4 D13L13 S4 E1 S110 W25 N11 W2 N13 E2 N23 W2 N14 E2 N12 W8 N14 E7 N12 W2 N28 $
FUS=[YR=2025;LABEL=3rd FLR;ORIG=102,-3] U4R4 U19R19 U5R5 E28 S2 E12 N1 E14 S3 E12 N9 E13 S9 E11 S10 S8 S7 W74 N1 W4 D13L13 S4 E1 S110 W19 W6 N11 W2 N13 E2 N23 W2 N14 E2 N12 W8 N14 E7 N12 W2 N28 $
FUS=[YR=2025;LABEL=2nd FLR;ORIG=-195,218] U4R4 U19R19 U5R5 E28 S2 E12 N1 E14 S3 E12 N9 E13 S9 E11 S10 S8 S7 W74 N1 W4 D13L13 S4 E1 S110 W19 W6 N11 W2 N13 E2 N23 W2 N14 E2 N12 W8 N14 E7 N12 W2 N28 $
FUS=[YR=2025;LABEL=4thFLR;ORIG=104,218] U4R4 U19R19 U5R5 E28

EXTRA FEATURES

L N	OB/XF CODE	DESCRIPTION	BLD	CAP	L	W	UNITS	UT	Adj R	ADJ UNIT PRICE	ORIG COND	YEAR ON	YEAR ACTUAL	Q	% COND	OB/XF MKT VALUE	NOTES

LAND DESCRIPTION

TOTAL OB/XF 0

L N	USE CODE	CLS	LAND USE DESCRIPTION	CAP	R D	LOC ZONE	FRONT	DEPTH	TOT LND UTS	UNIT TYPE	D T	DPTH FACT	% COND	TOT ADJ	UNIT PRICE	ADJ UNIT PRICE	LAND VALUE	OTHER ADJUSTMENTS AND NOTES	YEAR	DENSITY	DECL	FRZ	YR	CONSRV

REVIEW DATE 07/15/2022 BY RDC Total Acres: 0.00 Total Land Value: 0 Market: 0 Agricultural: 0 Common: 0 PRINTED 07/30/2025 BY SYS

PARCEL 5B-2
EAST NASSAU-WILDLIGHT PDP3/
POD 5 OR 2546/1608

EXCHANGE WILDLIGHT APRTMENTS LLC
3300 NE EXPRESSWAY BLDG 6
ATLANTA, GA 30341

2025

50-3N-27-1005-05B2-0000

NASSAU COUNTY PROPERTY

BUILDING CHARACTERISTICS

ELEMENT	CD	CONSTRUCTION
Exterior Wall	31	HARDIE BRD 90
Exterior Wall	20	FACE BRICK 10
Roof Structur	04	WOOD TRUSS 100
Roof Cover	03	COMP SHNGL 100
Interior Wall	05	DRYWALL 70
Interior Wall	08	DECORATIVE 30
Interior Floo	11	CLAY TILE 70
Interior Floo	14	CARPET 30
Ceiling	02	F.NOT SUS 100
Air Condition	03	CENTRAL 100
Heating Type	04	AIR DUCTED 100
Fixtures		20 100
Frame	02	WOOD FRAME 100
Story Height		10 100
RMS		10 100
Stories	1.	1. 100
Units		0 100
Quality	06	Quality Level 06

DOR CODE 0300 MULTI-FAMILY
MAP NUM | MKT AREA 04
NEIGHBORHOOD/LOC 4086.0200

AREA TYPE	TOTAL GROSS AREA	PCT OF BASE	YEAR	TOT ADJ AREA	SUBAREA MARKET VALUE
BAS	2,361	100	2025	2,361	451,414
BAS	2,570	100	2025	2,570	491,374
CAN	1,832	30	2025	550	105,158
FST	81	55	2025	45	8,604
FST	135	55	2025	74	14,149
TOTALS	6,979			5,600	1,070,698

MARKET ADJUSTMENTS

TYPE	MDL	EFF. AREA	TOT ADJ PTS	EFF. BASE RATE	REPL. COST NEW	AYB	EYB	ECON	FNCT	AP	NORM	% COND
0303	03	5,600	194.9016	212.44	1,189,664	2024	2024	0	0	10	0.00	90.00

13 CLUB HOUSE – 0% - 2025 Heated Area: 4931 HX Base Yr

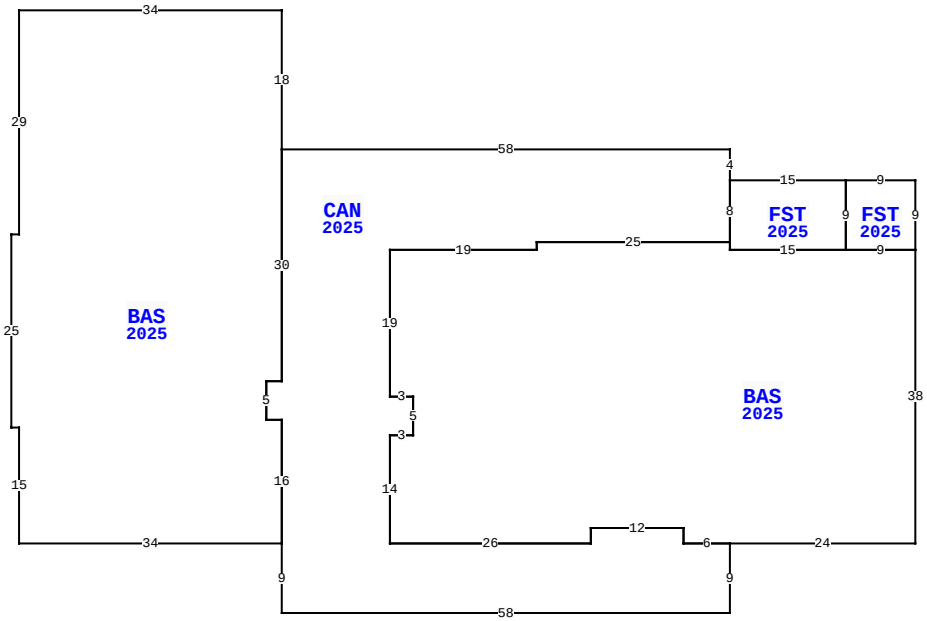

549 WILDLIGHT AV, YULEE

BLD DATE	04/08/2025	REA	LGL DATE	
XF DATE			LAND DATE	05/09/2025 DC
INC DATE	07/11/2025	REA	AG DATE	

VALUATION SUMMARY

VALUATION BY	DIRECT_CAP
Tax Group: 4	Tax Dist:
BUILDING MARKET VALUE	59,291,719
TOTAL MARKET OB/XF VALUE	0
TOTAL LAND VALUE - MARKET	0
TOTAL MARKET VALUE	59,291,719
SOH/AGL Deduction	0
ASSESSED VALUE	59,291,719
TOTAL EXEMPTION VALUE	0
BASE TAXABLE VALUE	59,291,719
TOTAL JUST VALUE	59,291,719
NCON VALUE	56,908,025
INCOME VALUE	59,291,719
PREVIOUS YEAR MKT VALUE	4,500,000

PERMIT NUM	DESCRIPTION	AMT	ISSUED

SALES DATA

OFF RECORD Number	DATE	TYPE INST	Q / U	V / I	RSN CD	SALE PRICE
2575/0293	6/28/2022	SW	Q	V	01	4,800,000

GRANTOR: WILDLIGHT LLC
GRANTEE: EXCHANGE WILDLIGHT

BUILDING NOTES

BUILDING DIMENSIONS

BAS=[YR=2025;LABEL=clubhouse _ leasing offices;ORIG=7,-7] E19 N1 E25 S1 E15 E9 S38 W24 W6 N2 W12 S2 W26 N14 E3 N5 W3 N19 $
BAS=[YR=2025;LABEL=mailboxes_ pool bathrooms_ fitness center;ORIG=-41,-38] E34 S18 S30 W2 S5 E2 S16 W34 N15 W1 N25 E1 N29 $
CAN=[YR=2025;ORIG=-7,40] N9 N16 W2 N5 E2 N30 E58 S4 S8 W25 S1 W19 S19 E3 S5 W3 S14 E26 N2 E12 S2 E6 S9 W58 $
FST=[YR=2025;LABEL=pool eqmt room;ORIG=51,-16] E15 S9 W15 N1 N8 $
FST=[YR=2025;LABEL=chemical strg;ORIG=66,-16] E9 S9 W9 N9 $
.

EXTRA FEATURES

LN	OB/XF CODE	DESCRIPTION	BLD	CAP	L	W	UNITS	UT	Adj R	ADJ UNIT PRICE	ORIG COND	YEAR ON	YEAR ACTUAL	Q	% COND	OB/XF MKT VALUE	NOTES

LAND DESCRIPTION

TOTAL OB/XF 0

LN	USE CODE	CLS	LAND USE DESCRIPTION	CAP	RD	LOC ZONE	FRONT	DEPTH	TOT LND UTS	UNIT TYPE	DT	DPTH FACT	% COND	TOT ADJ	UNIT PRICE	ADJ UNIT PRICE	LAND VALUE	OTHER ADJUSTMENTS AND NOTES	YEAR	DENSITY	DECL	FRZ	YR	CONSRV

REVIEW DATE 07/15/2022 BY RDC Total Acres: 0.00 Total Land Value: 0 Market: 0 Agricultural: 0 Common: 0 PRINTED 07/30/2025 BY SYS

PARCEL 5B-2
EAST NASSAU-WILDLIGHT PDP3/
POD 5 OR 2546/1608

EXCHANGE WILDLIGHT APRTMENTS LLC
3300 NE EXPRESSWAY BLDG 6
ATLANTA, GA 30341

2025

50-3N-27-1005-05B2-0000

NASSAU COUNTY PROPERTY

BUILDING CHARACTERISTICS

ELEMENT	CD	CONSTRUCTION
Exterior Wall	31	HARDIE BRD 100
Roof Structur	04	WOOD TRUSS 100
Roof Cover	03	COMP SHNGL 100
Interior Wall	05	DRYWALL 100
Interior Floo	03	CONC FINSH 100
Air Condition	02	WINDOW 100
Heating Type	03	FORCED AIR 100
Fixtures		3 100
Frame	02	WOOD FRAME 100
Story Height		9 100
RMS		2 100
Stories	1.	1. 100
Units		0 100
Quality	06	Quality Level 06

DOR CODE	0300	MULTI-FAMILY	
MAP NUM		MKT AREA	04
NEIGHBORHOOD/LOC	4086.0200		

AREA TYPE	TOTAL GROSS AREA	PCT OF BASE	YEAR	TOT ADJ AREA	SUBAREA MARKET VALUE
BAS	189	100	2025	189	9,302
BAS	483	100	2025	483	23,774
TOTALS	672			672	33,077

MARKET ADJUSTMENTS

TYPE	MDL	EFF. AREA	TOT ADJ PTS	EFF. BASE RATE	REPL. COST NEW	AYB	EYB	ECON	FNCT	AP	NORM	% COND
0304	03	672	169.5750	54.69	36,752	2024	2024	0	0	10	0.00	90.00

14 APART/GAR – 0% - 2025 Heated Area: 672 HX Base Yr

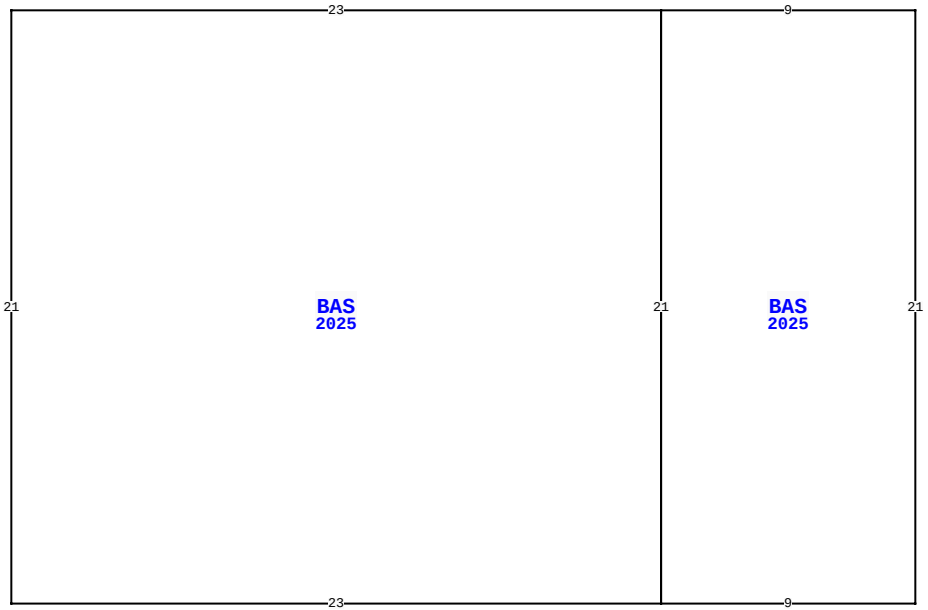

549 WILDLIGHT AV, YULEE

BLD DATE	04/08/2025	REA	LGL DATE	
XF DATE			LAND DATE	05/09/2025 DC
INC DATE	07/11/2025	REA	AG DATE	

VALUATION SUMMARY

VALUATION BY	DIRECT_CAP
Tax Group: 4	Tax Dist:
BUILDING MARKET VALUE	59,291,719
TOTAL MARKET OB/XF VALUE	0
TOTAL LAND VALUE - MARKET	0
TOTAL MARKET VALUE	59,291,719
SOH/AGL Deduction	0
ASSESSED VALUE	59,291,719
TOTAL EXEMPTION VALUE	0
BASE TAXABLE VALUE	59,291,719
TOTAL JUST VALUE	59,291,719
NCON VALUE	56,908,025
INCOME VALUE	59,291,719
PREVIOUS YEAR MKT VALUE	4,500,000

PERMIT NUM	DESCRIPTION	AMT	ISSUED

SALES DATA

OFF RECORD Number	DATE	TYPE INST	Q / U	V / I	RSN CD	SALE PRICE
2575/0293	6/28/2022	SW	Q	V	01	4,800,000

GRANTOR: WILDLIGHT LLC

GRANTEE: EXCHANGE WILDLIGHT

BUILDING NOTES

BUILDING DIMENSIONS

BAS=[YR=2025;LABEL=garage;ORIG=30,10] E23 S21 W23 N21 $
BAS=[YR=2025;LABEL=dog wash;ORIG=53,10] E9 S21 W9 N21 $
.

EXTRA FEATURES

LN	OB/XF CODE	DESCRIPTION	BLD	CAP	L	W	UNITS	UT	Adj R	ADJ UNIT PRICE	ORIG COND	YEAR ON	YEAR ACTUAL	Q	% COND	OB/XF MKT VALUE	NOTES

LAND DESCRIPTION

TOTAL OB/XF 0

LN	USE CODE	CLS	LAND USE DESCRIPTION	CAP	RD	LOC ZONE	FRONT	DEPTH	TOT LND UTS	UNIT TYPE	DT	DPTH FACT	% COND	TOT ADJ	UNIT PRICE	ADJ UNIT PRICE	LAND VALUE	OTHER ADJUSTMENTS AND NOTES	YEAR	DENSITY	DECL	FRZ	YR	CONSRV

REVIEW DATE 07/15/2022 BY RDC Total Acres: 0.00 Total Land Value: 0 Market: 0 Agricultural: 0 Common: 0 PRINTED 07/30/2025 BY SYS

PARCEL 5B-2
EAST NASSAU-WILDLIGHT PDP3/
POD 5 OR 2546/1608

EXCHANGE WILDLIGHT APRTMENTS LLC
3300 NE EXPRESSWAY BLDG 6
ATLANTA, GA 30341

2025

50-3N-27-1005-05B2-0000

NASSAU COUNTY PROPERTY

BUILDING CHARACTERISTICS

ELEMENT	CD	CONSTRUCTION
Exterior Wall	31	HARDIE BRD 100
Roof Structur	04	WOOD TRUSS 100
Roof Cover	03	COMP SHNGL 100
Interior Wall	05	DRYWALL 100
Interior Floo	03	CONC FINSH 100
Air Condition	01	NONE 100
Heating Type	01	NONE 100
Fixtures		0 100
Frame	02	WOOD FRAME 100
Story Height		9 100
RMS		6 100
Stories	1.	1. 100
Units		0 100
Quality	04	Quality Level 04

DOR CODE 0300 MULTI-FAMILY
MAP NUM | MKT AREA 04
NEIGHBORHOOD/LOC 4086.0200

AREA TYPE	TOTAL GROSS AREA	PCT OF BASE	YEAR	TOT ADJ AREA	SUBAREA MARKET VALUE
BAS	1,348	100	2025	1,348	49,105
TOTALS	1,348			1,348	49,105

MARKET ADJUSTMENTS

TYPE	MDL	EFF. AREA	TOT ADJ PTS	EFF. BASE RATE	REPL. COST NEW	AYB	EYB	ECON	FNCT	AP	NORM	% COND
2703	03	1,348	86.6250	40.93	55,174	2024	2024	0	0	10	1.00	89.00

15 GARAGE – 0% - 2025 Heated Area: 1348 HX Base Yr

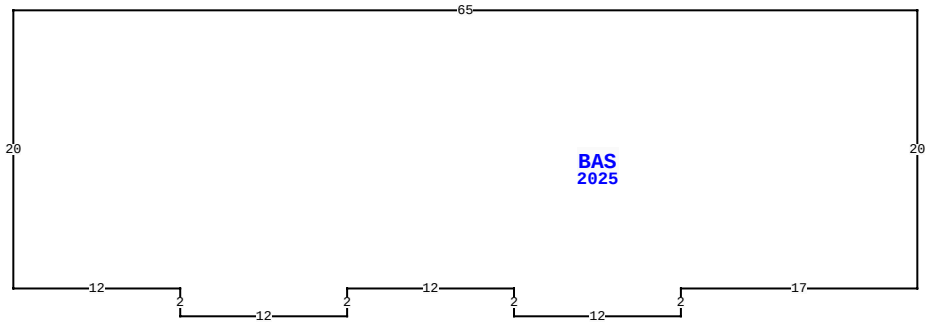

549 WILDLIGHT AV, YULEE

BLD DATE	04/08/2025	REA	LGL DATE
XF DATE			LAND DATE 05/09/2025 DC
INC DATE	07/11/2025	REA	AG DATE

VALUATION SUMMARY

VALUATION BY	DIRECT_CAP
Tax Group: 4	Tax Dist:
BUILDING MARKET VALUE	59,291,719
TOTAL MARKET OB/XF VALUE	0
TOTAL LAND VALUE - MARKET	0
TOTAL MARKET VALUE	59,291,719
SOH/AGL Deduction	0
ASSESSED VALUE	59,291,719
TOTAL EXEMPTION VALUE	0
BASE TAXABLE VALUE	59,291,719
TOTAL JUST VALUE	59,291,719
NCON VALUE	56,908,025
INCOME VALUE	59,291,719
PREVIOUS YEAR MKT VALUE	4,500,000

PERMIT NUM	DESCRIPTION	AMT	ISSUED

SALES DATA

OFF RECORD Number	DATE	TYPE INST	Q U	V I	RSN CD	SALE PRICE
2575/0293	6/28/2022	SW	Q	V	01	4,800,000

GRANTOR: WILDLIGHT LLC
GRANTEE: EXCHANGE WILDLIGHT

BUILDING NOTES

BUILDING DIMENSIONS

BAS=[YR=2025;ORIG=20,10] E65 S20 W17 S2 W12 N2 W12 S2 W12 N2 W12 N20 $
.

EXTRA FEATURES

L N	OB/XF CODE	DESCRIPTION	BLD	CAP	L	W	UNITS	UT	Adj R	ADJ UNIT PRICE	ORIG COND	YEAR ON	YEAR ACTUAL	Q	% COND	OB/XF MKT VALUE	NOTES

LAND DESCRIPTION

TOTAL OB/XF 0

L N	USE CODE	CLS	LAND USE DESCRIPTION	CAP	R D	LOC ZONE	FRONT	DEPTH	TOT LND UTS	UNIT TYPE	D T	DPTH FACT	% COND	TOT ADJ	UNIT PRICE	ADJ UNIT PRICE	LAND VALUE	OTHER ADJUSTMENTS AND NOTES	YEAR	DENSITY	DECL	FRZ	YR	CONSRV

REVIEW DATE 07/15/2022 BY RDC Total Acres: 0.00 Total Land Value: 0 Market: 0 Agricultural: 0 Common: 0 PRINTED 07/30/2025 BY SYS

PARCEL 5B-2
EAST NASSAU-WILDLIGHT PDP3/
POD 5 OR 2546/1608

EXCHANGE WILDLIGHT APRTMENTS LLC
3300 NE EXPRESSWAY BLDG 6
ATLANTA, GA 30341

2025

50-3N-27-1005-05B2-0000

NASSAU COUNTY PROPERTY

BUILDING CHARACTERISTICS

ELEMENT	CD	CONSTRUCTION
Exterior Wall	31	HARDIE BRD 100
Roof Structur	04	WOOD TRUSS 100
Roof Cover	03	COMP SHNGL 100
Interior Wall	05	DRYWALL 100
Interior Floo	03	CONC FINSH 100
Air Condition	01	NONE 100
Heating Type	01	NONE 100
Fixtures		0 100
Frame	02	WOOD FRAME 100
Story Height		9 100
RMS		6 100
Stories	1.	1. 100
Units		0 100
Quality	04	Quality Level 04

DOR CODE 0300 MULTI-FAMILY
MAP NUM | MKT AREA 04
NEIGHBORHOOD/LOC 4086.0200

AREA TYPE	TOTAL GROSS AREA	PCT OF BASE	YEAR	TOT ADJ AREA	SUBAREA MARKET VALUE
BAS	1,348	100	2025	1,348	49,105
TOTALS	1,348			1,348	49,105

MARKET ADJUSTMENTS

TYPE	MDL	EFF. AREA	TOT ADJ PTS	EFF. BASE RATE	REPL. COST NEW	AYB	EYB	ECON	FNCT	AP	NORM	% COND
2703	03	1,348	86.6250	40.93	55,174	2024	2024	0	0	10	1.00	89.00

16 GARAGE – 0% - 2025 Heated Area: 1348 HX Base Yr

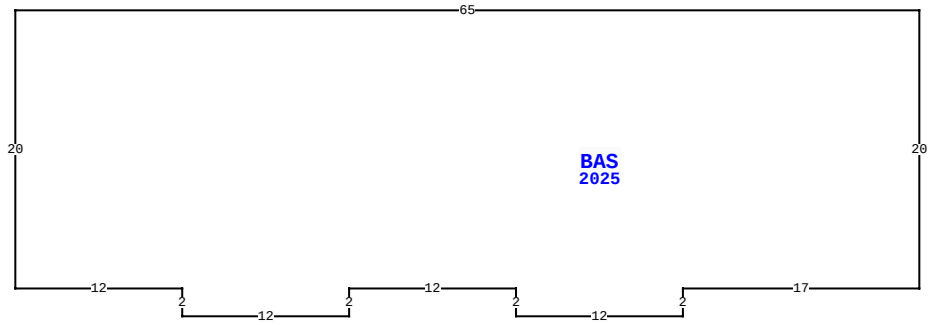

549 WILDLIGHT AV, YULEE

BLD DATE	04/08/2025 REA	LGL DATE	
XF DATE		LAND DATE	05/09/2025 DC
INC DATE	07/11/2025 REA	AG DATE	

VALUATION SUMMARY

VALUATION BY	DIRECT_CAP
Tax Group: 4	Tax Dist:
BUILDING MARKET VALUE	59,291,719
TOTAL MARKET OB/XF VALUE	0
TOTAL LAND VALUE - MARKET	0
TOTAL MARKET VALUE	59,291,719
SOH/AGL Deduction	0
ASSESSED VALUE	59,291,719
TOTAL EXEMPTION VALUE	0
BASE TAXABLE VALUE	59,291,719
TOTAL JUST VALUE	59,291,719
NCON VALUE	56,908,025
INCOME VALUE	59,291,719
PREVIOUS YEAR MKT VALUE	4,500,000

PERMIT NUM	DESCRIPTION	AMT	ISSUED

SALES DATA

OFF RECORD Number	DATE	TYPE INST	Q U	V I	RSN CD	SALE PRICE
2575/0293	6/28/2022	SW	Q	V	01	4,800,000

GRANTOR: WILDLIGHT LLC
GRANTEE: EXCHANGE WILDLIGHT

BUILDING NOTES

BUILDING DIMENSIONS

BAS=[YR=2025;ORIG=20,10] E65 S20 W17 S2 W12 N2 W12 S2 W12 N2 W12 N20 $
.

EXTRA FEATURES

L N	OB/XF CODE	DESCRIPTION	BLD	CAP	L	W	UNITS	UT	Adj R	ADJ UNIT PRICE	ORIG COND	YEAR ON	YEAR ACTUAL	Q	% COND	OB/XF MKT VALUE	NOTES

LAND DESCRIPTION

TOTAL OB/XF 0

L N	USE CODE	CLS	LAND USE DESCRIPTION	CAP	R D	LOC ZONE	FRONT	DEPTH	TOT LND UTS	UNIT TYPE	D T	DPTH FACT	% COND	TOT ADJ	UNIT PRICE	ADJ UNIT PRICE	LAND VALUE	OTHER ADJUSTMENTS AND NOTES	YEAR	DENSITY	DECL	FRZ	YR	CONSRV

REVIEW DATE 07/15/2022 BY RDC Total Acres: 0.00 Total Land Value: 0 Market: 0 Agricultural: 0 Common: 0 PRINTED 07/30/2025 BY SYS