LOT 252
DEL WEBB WILDLIGHT PHASE 2B
OR 2608/961

GORDON EUGENIA & BRIAN
445 CONTINUUM LOOP
YULEE, FL 32097

2025

50-3N-27-1004-0252-0000

BUILDING CHARACTERISTICS

ELEMENT	CD	CONSTRUCTION
Exterior Wall	31	HARDIE BRD 100
Roof Structur	03	GABLE/HIP 100
Roof Cover	03	COMP SHNGL 100
Interior Wall	05	DRYWALL 100
Interior Floo	13	LVT/LAMNT 70
Interior Floo	14	CARPET 30
Air Condition	03	CENTRAL 100
Heating Type	04	AIR DUCTED 100
Bedrooms		2 100
Bathrooms		2 100
Frame	02	WOOD FRAME 100
Stories	1.	1. 100
Units		0 100
Quality	06	Quality Level 06
DOR CODE	0100	SINGLE FAMILY
MAP NUM		MKT AREA 04
NEIGHBORHOOD/LOC	4094.00	

AREA TYPE	TOTAL GROSS AREA	PCT OF BASE	YEAR	TOT ADJ AREA	SUBAREA MARKET VALUE
BAS	1,839	100	2024	1,839	299,297
FGR	650	55	2024	358	58,265
FOP	24	30	2024	7	1,139
FSP	322	40	2024	129	20,995
PTO	120	5	2023	6	977
TOTALS	2,955			2,339	380,672

MARKET ADJUSTMENTS

TYPE	MDL	EFF. AREA	TOT ADJ PTS	EFF. BASE RATE	REPL. COST NEW	AYB	EYB	ECON	FNCT		NORM	% COND
0900	01	2,339	123.2938	162.75	380,672	2023	2023	0	0	0	0.00	100.00

2 SNGL FAM – 100% - 2024 Heated Area: 1839 HX Base Yr 2024

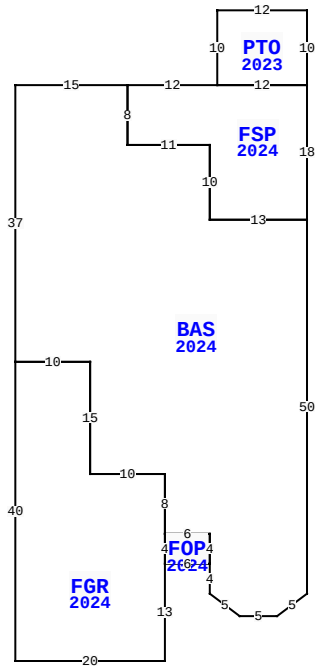

445 CONTINUUM LOOP, YULEE

BLD DATE		LGL DATE	
XF DATE		LAND DATE	05/13/2025 MLU
INC DATE		AG DATE	

NASSAU COUNTY PROPERTY

PAGE 1 of 1 4

VALUATION SUMMARY

VALUATION BY		STANDARD
Tax Group: 4	Tax Dist:	
BUILDING MARKET VALUE		380,672
TOTAL MARKET OB/XF VALUE		8,830
TOTAL LAND VALUE - MARKET		85,000
TOTAL MARKET VALUE		474,502
SOH/AGL Deduction		106,383
ASSESSED VALUE		368,119
TOTAL EXEMPTION VALUE	HX HB	50,722
BASE TAXABLE VALUE		317,397
TOTAL JUST VALUE		474,502
NCON VALUE		7,808
INCOME VALUE		
PREVIOUS YEAR MKT VALUE		436,785

PERMIT NUM	DESCRIPTION	AMT	ISSUED
B240002222	EXISTING LANAI SC	6,500	02/26/2024
230010299	CO ISSUED		08/10/2023
22017895	NEW CONSTR	361,562	12/06/2022

SALES DATA

OFF RECORD Number	DATE	TYPE INST	Q / U	V / I	RSN CD	SALE PRICE
2662/1189	8/17/2023	SW	Q	I	01	526,300

GRANTOR: PULTE HOME COMPANY LL

GRANTEE: GORDON EUGENIA & BR

BUILDING NOTES

BUILDING DIMENSIONS

BAS=[YR=2024;ORIG=39,11] W13 N10 W11 N8 W15 S37 E10 S15 E10 S8 E6 S4 S4 D3R4 E5 U3R4 N50 $
FGR=[YR=2024;ORIG=0,30] E10 S15 E10 S8 S4 S13 W20 N40 $
FSP=[YR=2024;ORIG=15,-7] S8 E11 S10 E13 N18 W12 W12 $
PTO=[YR=2023;ORIG=27,-17] E12 S10 W12 N10 $
FOP=[YR=2024;ORIG=20,53] E6 S4 W6 N4 $
.

EXTRA FEATURES

LN	OB/XF CODE	DESCRIPTION	BLD	CAP	L	W	UNITS	UT	Adj R	ADJ UNIT PRICE	ORIG COND	YEAR ON	YEAR ACTUAL	Q	% COND	OB/XF MKT VALUE	NOTES
1	0855	CONC PAVER	0	100	0	0	623.00	SF	10.00	10.00	100	2024	2023		100	6,230	
2	0912	SCRN RM G	0	100	10	13	130.00	SF	20.00	20.00	100	2025	2024		100	2,600	

LAND DESCRIPTION

TOTAL OB/XF 8,830

LN	USE CODE	CLS	LAND USE DESCRIPTION	CAP	RD	LOC ZONE	FRONT	DEPTH	TOT LND UTS	UNIT TYPE	DT	DPTH FACT	% COND	TOT ADJ	UNIT PRICE	ADJ UNIT PRICE	LAND VALUE	OTHER ADJUSTMENTS AND NOTES	YEAR	DENSITY	DECL	FRZ	YR	CONSRV
1	000134	C	RES POND	100		PD -	E 0.00	0.00	1.00	LT		1.00	1.00	1.00	85,000.00	85,000.00	85,000							

REVIEW DATE 05/01/2025 BY KB Total Acres: 0.00 Total Land Value: 85,000 Market: 0 Agricultural: 0 Common: 85,000 PRINTED 07/30/2025 BY SYS