PT E WATERMAN MILL GRANT
SEC 50-3N-27E IN OR 1980/1377
BEINGS PARCELS A & B

DUHAN JEFFREY P & FELICITY
463688 SR 200 STE 1 PMB 521
YULEE, FL 32097

2025

50-3N-27-0000-0001-0040

BUILDING CHARACTERISTICS

ELEMENT	CD	CONSTRUCTION
Exterior Wall	16	WD FR STUC 50
Exterior Wall	31	HARDIE BRD 50
Roof Structur	02	SHED 100
Roof Cover	03	COMP SHNGL 100
Interior Wall	05	DRYWALL 100
Interior Floo	11	CLAY TILE 50
Interior Floo	14	CARPET 50
Air Condition	03	CENTRAL 100
Heating Type	04	AIR DUCTED 100
Bedrooms		4 100
Bathrooms		3 100
Frame	02	WOOD FRAME 100
Stories	1.5	1.5 100
Units		0 100
Occupancy	00	NONE 100
Quality	03	Quality Level 03
DOR CODE	5000	IMPROVED AG
MAP NUM		MKT AREA 04
NEIGHBORHOOD/LOC	4053.00	

AREA TYPE	TOTAL GROSS AREA	PCT OF BASE	YEAR	TOT ADJ AREA	SUBAREA MARKET VALUE
BAL	100	15	2019	15	1,942
BAS	2,885	100	2019	2,885	373,549
DCK	50	10	2019	5	647
DCK	208	10	2019	21	2,719
FGR	552	55	2019	304	39,362
FOP	42	30	2019	13	1,683
FOP	148	30	2019	44	5,697
FUS	300	100	2019	300	38,844
TOTALS	4,285			3,587	464,443

MARKET ADJUSTMENTS

TYPE	MDL	EFF. AREA	TOT ADJ PTS	EFF. BASE RATE	REPL. COST NEW	AYB	EYB	ECON	FNCT		NORM	% COND
0900	01	3,587	100.3500	132.46	475,134	2019	2019	0	0	0	2.25	97.75

1 SNGL FAM – 100% - 2020 Heated Area: 3185 HX Base Yr 2020

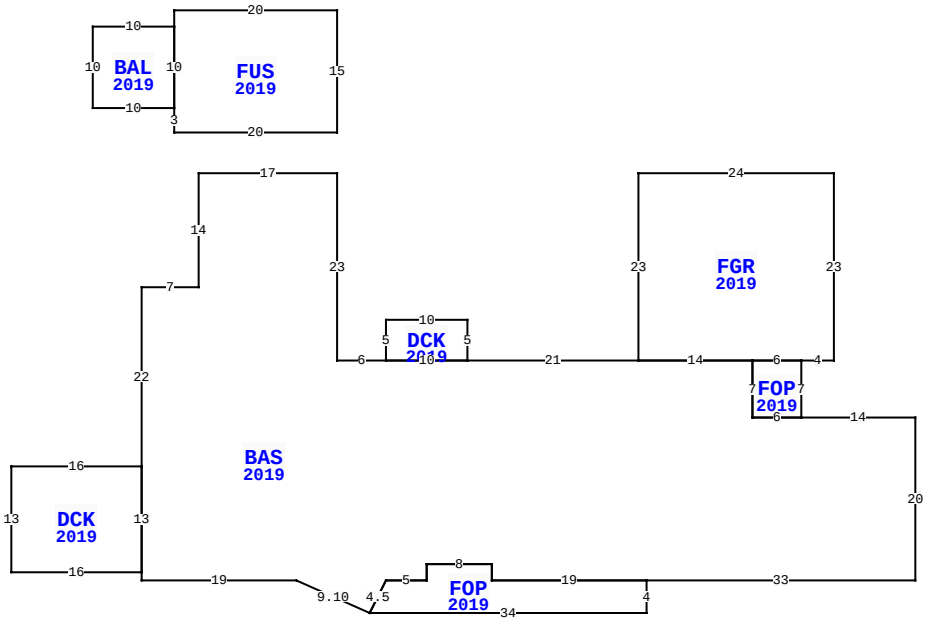

851136 US HWY 17, YULEE

BLD DATE		LGL DATE	
XF DATE		LAND DATE	05/08/2025 MLU
INC DATE		AG DATE	

NASSAU COUNTY PROPERTY

PAGE 1 of 1 4

VALUATION SUMMARY

VALUATION BY		STANDARD
Tax Group: 4	Tax Dist:	
BUILDING MARKET VALUE		464,443
TOTAL MARKET OB/XF VALUE		4,540
TOTAL LAND VALUE - MARKET		633,240
TOTAL MARKET VALUE		564,893
SOH/AGL Deduction		198,392
ASSESSED VALUE		366,501
TOTAL EXEMPTION VALUE	HX HB	50,722
BASE TAXABLE VALUE		315,779
TOTAL JUST VALUE		1,102,223
NCON VALUE		0
INCOME VALUE		
PREVIOUS YEAR MKT VALUE		1,074,905

PERMIT NUM	DESCRIPTION	AMT	ISSUED
19001814	CO ISSUED	0	02/22/2019
17005174	NEW CONSTR	0	06/12/2017

SALES DATA

OFF RECORD Number	DATE	TYPE INST	Q U	V I	RSN CD	SALE PRICE
2324/1965	12/02/2019	QC	U	I	11	162,500
GRANTOR: DUHAN JEFFREY PAUL						
GRANTEE: DUHAN JEFFREY P & F						
1980/1377	5/15/2015	WD	U	V	37	77,500
GRANTOR: QUINN JOHN J & DOROTH						
GRANTEE: DUHAN JEFFREY PAUL						

BUILDING NOTES

EXTRA FEATURES

LN	OB/XF CODE	DESCRIPTION	BLD	CAP	L	W	UNITS	UT	Adj R	ADJ UNIT PRICE	ORIG COND	YEAR ON	YEAR ACTUAL	Q	% COND	OB/XF MKT VALUE	NOTES
1	0810	CONCRETE A	0	100	0	0	720.00	SF	6.50	6.50	100	2019	2019	3	97	4,540	

BUILDING DIMENSIONS

BAS=[YR=2019;ORIG=-24,23] W21 W10 W6 N23 W17 S14 W7 S22 S13 S1 E19 D4R9 U4R2 E5 N2 E8 S2 E19 E33 N20 W14 W6 N7 W14 $
FGR=[YR=2019;ORIG=0,0] W24 S23 E14 E6 E4 N23 $
FUS=[YR=2019;ORIG=-81,-18] N2 E20 S15 W20 N3 N10 $
DCK=[YR=2019;ORIG=-85,36] W16 S13 E16 N13 $
FOP=[YR=2019;ORIG=-57,54] E34 N4 W19 N2 W8 S2 W5 D4L2 $
BAL=[YR=2019;ORIG=-91,-18] E10 S10 W10 N10 $
DCK=[YR=2019;ORIG=-45,23] N5 W10 S5 E10 $
FOP=[YR=2019;ORIG=-4,30] N7 W6 S7 E6 $
.

LAND DESCRIPTION

TOTAL OB/XF 4,540

LN	USE CODE	CLS	LAND USE DESCRIPTION	CAP	RD	LOC ZONE	FRONT	DEPTH	TOT LND UTS	UNIT TYPE	DT	DPTH FACT	% COND	TOT ADJ	UNIT PRICE	ADJ UNIT PRICE	LAND VALUE	OTHER ADJUSTMENTS AND NOTES	YEAR	DENSITY	DECL	FRZ	YR	CONSRV
1	005000	C	AGRICULTURAL	100		OR	0.00	0.00	1.00	AC		1.00	1.00	1.00	85,000.00	85,000.00	85,000							
2	005401	A	TIMBER 1 P	0		OR	0.00	0.00	7.58	AC		1.00	1.00	1.00	750.00	750.00	5,685							
3	005901	A	HARDWOOD SI	0		OR	0.00	0.00	8.00	AC		1.00	1.00	1.00	225.00	225.00	1,800							
4	005400	A	TIMBER 1 N S	0		OR	0.00	0.00	5.00	AC		1.00	1.00	1.00	685.00	685.00	3,425							
5	009910	M	MARKET VALUE	0		OR	0.00	0.00	19.58	AC		1.00	1.00	0.80	35,000.00	28,000.00	548,240							

REVIEW DATE 10/31/2024 BY KWA Total Acres: 21.58 Total Land Value: 95,910 Market: 548,240 Agricultural: 10,910 Common: 85,000 PRINTED 07/30/2025 BY SYS