PT OF LOT 1
IN OR 2260/1986
SUB OF SEC 49 PB 2/15

CUSHMAN ELVIN W &/CUSHMAN DARRYL L
PO BOX 5021
CALLAHAN, FL 32011

2025

49-2N-25-4100-0001-0091

NASSAU COUNTY PROPERTY

BUILDING CHARACTERISTICS

ELEMENT	CD	CONSTRUCTION
Exterior Wall	19	COMMON BRK 100
Roof Structur	03	GABLE/HIP 100
Roof Cover	03	COMP SHNGL 100
Interior Wall	04	PLYWOOD 50
Interior Wall	05	DRYWALL 50
Interior Floo	14	CARPET 80
Interior Floo	08	SHT VINYL 20
Air Condition	03	CENTRAL 100
Heating Type	04	AIR DUCTED 100
Bedrooms		3 100
Bathrooms		2.5 100
Frame	03	MASONRY 100
Stories	1.	1. 100
Units		0 100
BUD8 Adjustme	06	DIST 1D 100
Occupancy	00	NONE 100
Quality	03	Quality Level 03
DOR CODE	0100	SINGLE FAMILY
MAP NUM		MKT AREA 08
NEIGHBORHOOD/LOC	8026.00	

AREA TYPE	TOTAL GROSS AREA	PCT OF BASE	YEAR	TOT ADJ AREA	SUBAREA MARKET VALUE
BAS	1,791	100	1993	1,791	153,438
FGR	676	55	1993	372	31,870
FOP	161	30	1993	48	4,112
FOP	200	30	1993	60	5,140
PTO	266	5	1993	13	1,114
UST	120	45	1993	54	4,626
TOTALS	3,214			2,338	200,300

MARKET ADJUSTMENTS

TYPE	MDL	EFF. AREA	TOT ADJ PTS	EFF. BASE RATE	REPL. COST NEW	AYB	EYB	ECON	FNCT		NORM	% COND
0100	01	2,338	121.5200	121.52	284,114	1973	1985	0	0	0	29.50	70.50

1 SINGLE FAM – 0% - 0 Heated Area: 1791 HX Base Yr

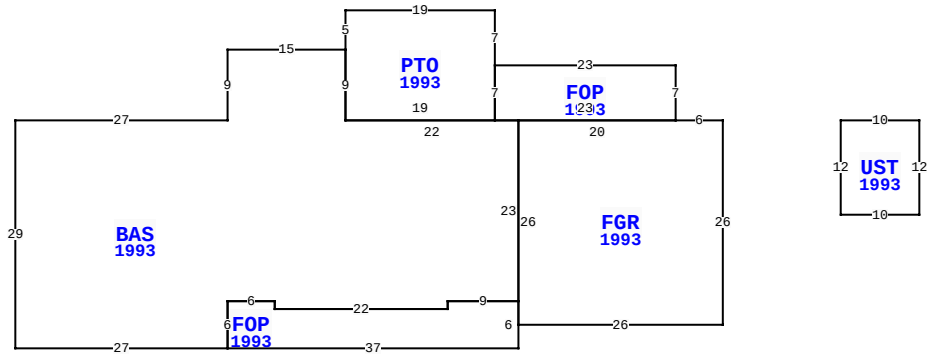

541848 US HWY 1, CALLAHAN

BLD DATE		LGL DATE	
XF DATE		LAND DATE	05/09/2025 MLU
INC DATE		AG DATE	

VALUATION SUMMARY

VALUATION BY	STANDARD
Tax Group: 6	Tax Dist:
BUILDING MARKET VALUE	311,714
TOTAL MARKET OB/XF VALUE	5,836
TOTAL LAND VALUE - MARKET	70,000
TOTAL MARKET VALUE	387,550
SOH/AGL Deduction	14,675
ASSESSED VALUE	372,875
TOTAL EXEMPTION VALUE	0
BASE TAXABLE VALUE	372,875
TOTAL JUST VALUE	387,550
NCON VALUE	0
INCOME VALUE	
PREVIOUS YEAR MKT VALUE	369,867

PERMIT NUM	DESCRIPTION	AMT	ISSUED
22008772	REPAIR/RRF	27,600	06/08/2022
MH003147	MH MOVE-ON	0	06/01/2000

SALES DATA

OFF RECORD Number	DATE	TYPE INST	Q / U	V / I	RSN CD	SALE PRICE
2260/1986	2/08/2019	QC	U	I	11	100
GRANTOR: CUSHMAN ELVIN WILLIAM						
GRANTEE: CUSHMAN ELVIN WILLI						
2183/1541	3/15/2018	WD	U	I	11	100
GRANTOR: CUSHMAN ELVIN WILLIAM						
GRANTEE: CUSHMAN DARRYL & EL						

BUILDING NOTES

BUILDING DIMENSIONS

FGR=[YR=1993] W6 FOP=[YR=1993] N7 W23 PTO=[YR=1993] N7 W19 S5 BAS=[YR=1993] W15 S9 W27 S29 E27 FOP=[YR=1993] E37 N6 W9 S1 W22 N1 W6 S6 $ N6 E6 S1 E22 N1 E9 N23 W22 N9 $ S9 E19 N7 $ S7 E23 $ W20 S26 E26 N26 $ PTR= E15 UST=[YR=1993] E10 S12 W10 N12 $ W15 $.

EXTRA FEATURES

LN	OB/XF CODE	DESCRIPTION	BLD	CAP	L	W	UNITS	UT	Adj R	ADJ UNIT PRICE	ORIG COND	YEAR ON	YEAR ACTUAL	Q	% COND	OB/XF MKT VALUE	NOTES
1	0681	POLE SHED	0	0	33	48	1,584.00	SF	15.00	15.00	100	1985	1985	3	20	4,752	
2	1242	WD DECK A	0	0	12	8	96.00	SF	10.00	10.00	100	2002	2002	3	20	192	
3	1242	WD DECK A	0	0	10	8	80.00	SF	10.00	10.00	100	2002	2002	3	20	160	
4	0940	SHEDS/PORT	0	0	20	10	200.00	SF	18.30	18.30	100	1995	1995	3	20	732	

LAND DESCRIPTION

TOTAL OB/XF 5,836

LN	USE CODE	CLS	LAND USE DESCRIPTION	CAP	RD	LOC ZONE	FRONT	DEPTH	TOT LND UTS	UNIT TYPE	DT	DPTH FACT	% COND	TOT ADJ	UNIT PRICE	ADJ UNIT PRICE	LAND VALUE	OTHER ADJUSTMENTS AND NOTES	YEAR	DENSITY	DECL	FRZ	YR	CONSRV
1	000100	C	RES	0	0004	OR	0.00	0.00	2.00	AC		1.00	1.00	1.00	35,000.00	35,000.00	70,000							

REVIEW DATE 01/09/2023 BY KWA Total Acres: 2.00 Total Land Value: 70,000 Market: 0 Agricultural: 0 Common: 70,000 PRINTED 07/30/2025 BY SYS

PT OF LOT 1
IN OR 2260/1986
SUB OF SEC 49 PB 2/15

CUSHMAN ELVIN W &/CUSHMAN DARRYL L
PO BOX 5021
CALLAHAN, FL 32011

2025

49-2N-25-4100-0001-0091

NASSAU COUNTY PROPERTY

BUILDING CHARACTERISTICS

ELEMENT	CD	CONSTRUCTION
Exterior Wall	30	VINYL 100
Roof Structur	03	GABLE/HIP 100
Roof Cover	03	COMP SHNGL 100
Interior Wall	05	DRYWALL 100
Interior Floo	14	CARPET 60
Interior Floo	08	SHT VINYL 40
Air Condition	03	CENTRAL 100
Heating Type	04	AIR DUCTED 100
Bedrooms		4 100
Bathrooms		2 100
Frame	02	WOOD FRAME 100
Stories	1.	1. 100
Units		0 100
Quality	03	Quality Level 03

DOR CODE 0100 SINGLE FAMILY
MAP NUM | MKT AREA 08
NEIGHBORHOOD/LOC 8026.00

AREA TYPE	TOTAL GROSS AREA	PCT OF BASE	YEAR	TOT ADJ AREA	SUBAREA MARKET VALUE
BAS	2,280	100	2015	2,280	108,280
UOP	264	25	2019	66	3,134
TOTALS	2,544			2,346	111,414

MARKET ADJUSTMENTS

TYPE	MDL	EFF. AREA	TOT ADJ PTS	EFF. BASE RATE	REPL. COST NEW	AYB	EYB	ECON	FNCT		NORM	% COND
0800	02	2,346	116.4000	98.94	232,113	2000	2002	0	0	0	52.00	48.00

3 M/H 94+ – 0% - 0 Heated Area: 2280 HX Base Yr

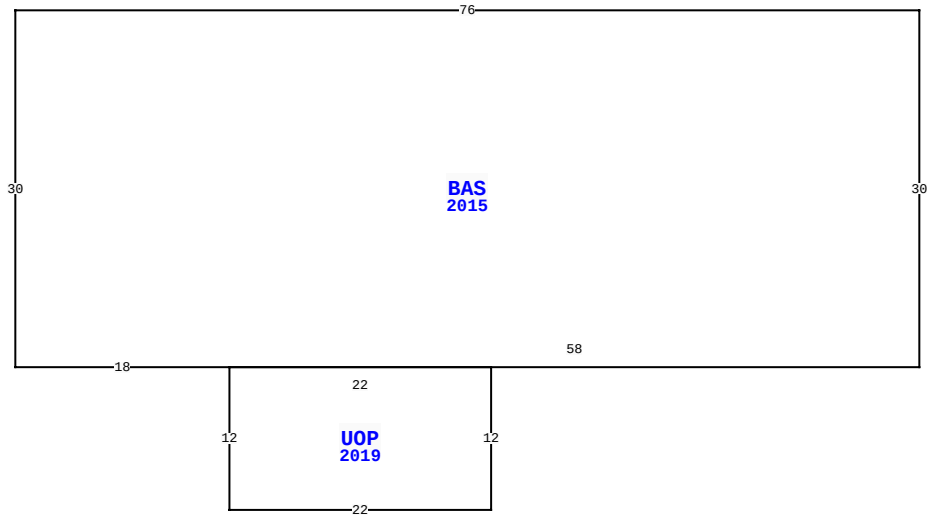

541848 US HWY 1, CALLAHAN

BLD DATE		LGL DATE	
XF DATE		LAND DATE	05/09/2025 MLU
INC DATE		AG DATE	

VALUATION SUMMARY

VALUATION BY	STANDARD
Tax Group: 6	Tax Dist:
BUILDING MARKET VALUE	311,714
TOTAL MARKET OB/XF VALUE	5,836
TOTAL LAND VALUE - MARKET	70,000
TOTAL MARKET VALUE	387,550
SOH/AGL Deduction	14,675
ASSESSED VALUE	372,875
TOTAL EXEMPTION VALUE	0
BASE TAXABLE VALUE	372,875
TOTAL JUST VALUE	387,550
NCON VALUE	0
INCOME VALUE	
PREVIOUS YEAR MKT VALUE	369,867

PERMIT NUM	DESCRIPTION	AMT	ISSUED

SALES DATA

OFF RECORD Number	DATE	TYPE INST	Q / U	V / I	RSN CD	SALE PRICE
2260/1986	2/08/2019	QC	U	I	11	100
GRANTOR: CUSHMAN ELVIN WILLIAM						
GRANTEE: CUSHMAN ELVIN WILLI						
2183/1541	3/15/2018	WD	U	I	11	100
GRANTOR: CUSHMAN ELVIN WILLIAM						
GRANTEE: CUSHMAN DARRYL & EL						

BUILDING NOTES

BUILDING DIMENSIONS

BAS=[YR=2015] W76 S30 E18 UOP=[YR=2019] S12 E22 N12 W22$ E58 N30$.

EXTRA FEATURES

LN	OB/XF CODE	DESCRIPTION	BLD	CAP	L	W	UNITS	UT	Adj R	ADJ UNIT PRICE	ORIG COND	YEAR ON	YEAR ACTUAL	Q	% COND	OB/XF MKT VALUE	NOTES

LAND DESCRIPTION

TOTAL OB/XF 0

LN	USE CODE	CLS	LAND USE DESCRIPTION	CAP	RD	LOC ZONE	FRONT	DEPTH	TOT LND UTS	UNIT TYPE	DT	DPTH FACT	% COND	TOT ADJ	UNIT PRICE	ADJ UNIT PRICE	LAND VALUE	OTHER ADJUSTMENTS AND NOTES	YEAR	DENSITY	DECL	FRZ	YR	CONSRV

REVIEW DATE 01/09/2023 BY KWA Total Acres: 2.00 Total Land Value: 70,000 Market: 0 Agricultural: 0 Common: 70,000 PRINTED 07/30/2025 BY SYS