LOT 45
IN OR 1852/323
LITTLE PINEY ISLAND PB 5/81

BURNINGHAM TIMOTHY & CLAUDIA
96292 PINEY ISLAND DRIVE
FERNANDINA BEACH, FL 32034

2025

47-3N-28-5000-0045-0000

BUILDING CHARACTERISTICS

ELEMENT	CD	CONSTRUCTION
Exterior Wall	16	WD FR STUC 100
Roof Structur	03	GABLE/HIP 100
Roof Cover	03	COMP SHNGL 100
Interior Wall	05	DRYWALL 100
Interior Floo	13	LVT/LAMNT 50
Interior Floo	14	CARPET 50
Air Condition	03	CENTRAL 100
Heating Type	04	AIR DUCTED 100
Bedrooms		4 100
Bathrooms		2.5 100
Frame	02	WOOD FRAME 100
Stories	2.	2. 100
Units		0 100
Occupancy	00	NONE 100
Quality	04	Quality Level 04

DOR CODE 0100 SINGLE FAMILY
MAP NUM | MKT AREA 04
NEIGHBORHOOD/LOC 4016.00

AREA TYPE	TOTAL GROSS AREA	PCT OF BASE	YEAR	TOT ADJ AREA	SUBAREA MARKET VALUE
BAS	2,142	100	2005	2,142	256,310
FGR	606	55	2005	333	39,846
FUS	230	100	2005	230	27,522
FUS	1,066	100	2005	1,066	127,557
STP	28	10	2005	3	359
STP	274	10	2005	27	3,231
TOTALS	4,346			3,801	454,824

MARKET ADJUSTMENTS

TYPE	MDL	EFF. AREA	TOT ADJ PTS	EFF. BASE RATE	REPL. COST NEW	AYB	EYB	ECON	FNCT		NORM	% COND
0900	01	3,801	100.1700	132.22	502,568	2005	2005	0	0	0	9.50	90.50

1 SNGL FAM – 100% - 2014 Heated Area: 3438 HX Base Yr 2014

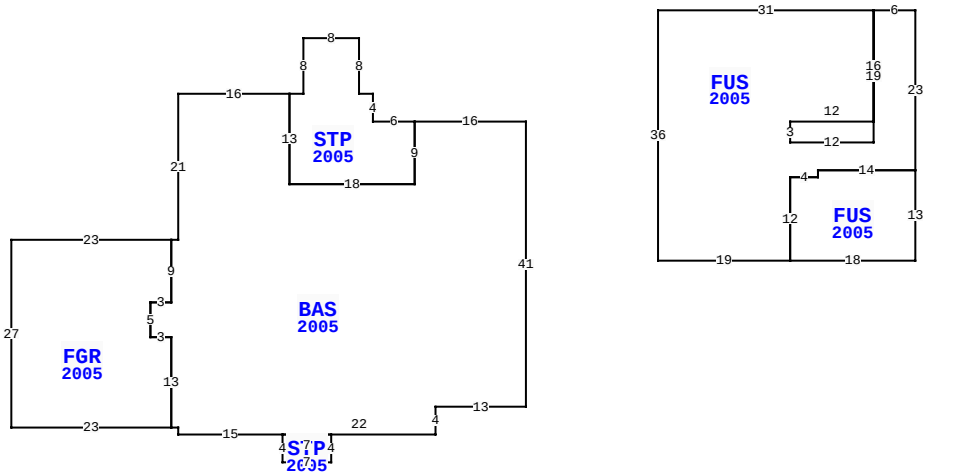

96292 PINEY ISLAND DR, FERNANDINA BEACH

BLD DATE		LGL DATE	
XF DATE		LAND DATE	04/15/2025 MLU
INC DATE		AG DATE	

NASSAU COUNTY PROPERTY

PAGE 1 of 1 7

VALUATION SUMMARY

VALUATION BY		STANDARD
Tax Group: 7	Tax Dist:	
BUILDING MARKET VALUE		454,824
TOTAL MARKET OB/XF VALUE		8,134
TOTAL LAND VALUE - MARKET		160,000
TOTAL MARKET VALUE		622,958
SOH/AGL Deduction		260,277
ASSESSED VALUE		362,681
TOTAL EXEMPTION VALUE	HX HB	50,722
BASE TAXABLE VALUE		311,959
TOTAL JUST VALUE		622,958
NCON VALUE		0
INCOME VALUE		
PREVIOUS YEAR MKT VALUE		591,396

PERMIT NUM	DESCRIPTION	AMT	ISSUED
B180681	(4) WINDOWS	15,914	06/14/2018
B1802405	H/AC	0	03/01/2018
B13074	NEW CONSTR	0	01/01/2005

SALES DATA

OFF RECORD Number	DATE	TYPE INST	Q U	V I	RSN CD	SALE PRICE
1852/0323	4/19/2013	WD	Q	I	02	400,000
GRANTOR: MIKLAS JAMIE P & CHRI						
GRANTEE: BURNINGHAM TIMOTHY						
0894/1388	8/10/1999	WD	Q	V		35,000
GRANTOR: JONES CHARLES M & DAN						
GRANTEE: MIKLAS JAMIE P & CH						

BUILDING NOTES

EXTRA FEATURES

LN	OB/XF CODE	DESCRIPTION	BLD	CAP	L	W	UNITS	UT	Adj R	ADJ UNIT PRICE	ORIG COND	YEAR ON	YEAR ACTUAL	Q	% COND	OB/XF MKT VALUE	NOTES
1	0504	FP-ELECTRI	0	100	0	0	1.00	UT	2,000.00	2,000.00	100	2005	2005	3	88	1,760	
2	0812	CONCRETE C	0	100	0	0	1,897.00	SF	4.00	4.00	100	2005	2005	3	84	6,374	

BUILDING DIMENSIONS

BAS=[YR=2005] W16STP=[YR=2005] W6N4W2N8W8 S8W2S13E18N9$S9W18N13W16S21W1 FGR=[YR=2005] W23S27E23N13W3N5E3N9$ S9W3S5E3S13E1S1E15STP=[YR=2005] S4E7 N4W7$E22N4E13N41$ PTR=E50 FUS=[YR=2005] N16 W31 S36 E19 FUS=[YR=2005] E18 N13 W14 S1 W4 S12 $ N12 E4 N1 E14 N23 W6 S19 W12 N3 E12 $ W50 $.

LAND DESCRIPTION

TOTAL OB/XF 8,134

LN	USE CODE	CLS	LAND USE DESCRIPTION	CAP	RD	LOC ZONE	FRONT	DEPTH	TOT LND UTS	UNIT TYPE	DT	DPTH FACT	% COND	TOT ADJ	UNIT PRICE	ADJ UNIT PRICE	LAND VALUE	OTHER ADJUSTMENTS AND NOTES	YEAR	DENSITY	DECL	FRZ	YR	CONSRV
1	000100	C	RES	100		RSF-1	0.00	0.00	1.00	LT		1.00	1.00	1.00	160,000.00	160,000.00	160,000							

REVIEW DATE 06/17/2019 BY KW Total Acres: 0.00 Total Land Value: 160,000 Market: 0 Agricultural: 0 Common: 160,000 PRINTED 07/30/2025 BY SYS