LOT 41
LITTLE PINEY ISLAND PB 5/81

DAVIS PEGGY T LIVING TRUST/DAVIS PEGGY T TRUSTEE
96260 PINEY ISLAND DR
FERNANDINA BEACH, FL 32034

2025

47-3N-28-5000-0041-0000

NASSAU COUNTY PROPERTY

BUILDING CHARACTERISTICS

ELEMENT	CD	CONSTRUCTION
Exterior Wall	16	WD FR STUC 100
Roof Structur	08	IRREGULAR 100
Roof Cover	03	COMP SHNGL 100
Interior Wall	05	DRYWALL 100
Interior Floo	09	PINE WOOD 80
Interior Floo	14	CARPET 20
Air Condition	03	CENTRAL 100
Heating Type	04	AIR DUCTED 100
Bedrooms		3 100
Bathrooms		3 100
Frame	02	WOOD FRAME 100
Stories	2.	2. 100
Units		0 100
Occupancy	00	NONE 100
Quality	04	Quality Level 04
DOR CODE	0100	SINGLE FAMILY
MAP NUM		MKT AREA 04
NEIGHBORHOOD/LOC	4016.00	

AREA TYPE	TOTAL GROSS AREA	PCT OF BASE	YEAR	TOT ADJ AREA	SUBAREA MARKET VALUE
BAS	2,098	100	2000	2,098	226,662
FGR	645	55	2000	355	38,353
FOP	72	30	2000	22	2,377
FOP	84	30	2000	25	2,701
FOP	100	30	2000	30	3,241
FOP	110	30	2000	33	3,565
FSP	420	40	2000	168	18,150
FUS	540	100	2000	540	58,340
FUS	1,443	100	2000	1,443	155,898
UOP	32	20	2000	6	649
TOTALS	5,592			4,730	511,018

MARKET ADJUSTMENTS

TYPE	MDL	EFF. AREA	TOT ADJ PTS	EFF. BASE RATE	REPL. COST NEW	AYB	EYB	ECON	FNCT		NORM	% COND
0900	01	4,730	93.0090	122.77	580,702	2000	2000	0	0	0	12.00	88.00

1 SNGL FAM – 100% - 2001 Heated Area: 4081 HX Base Yr 2001

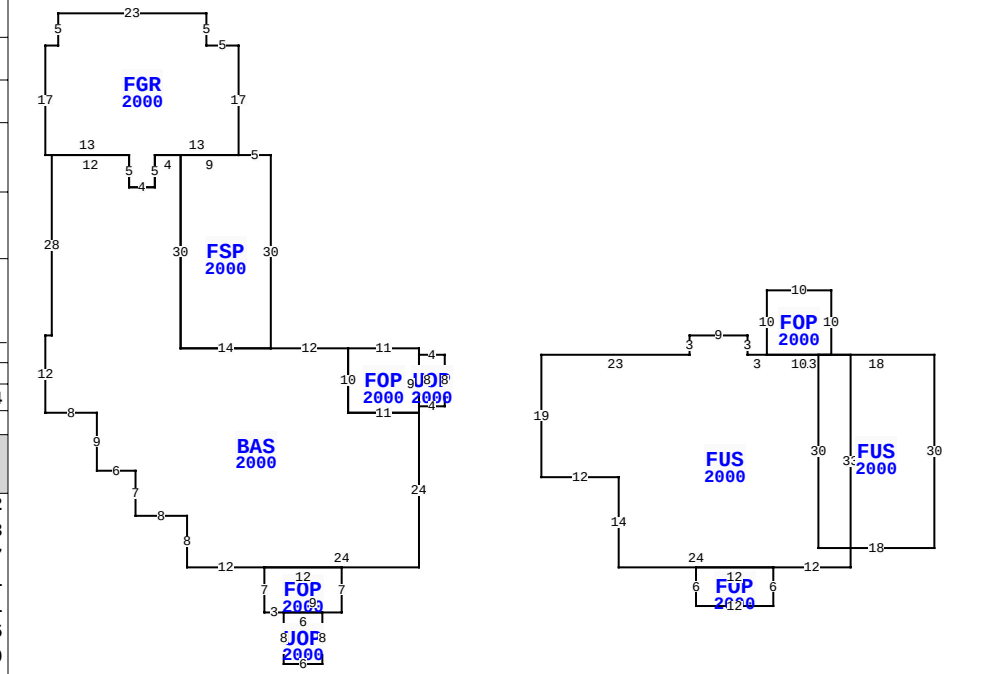

** This building has 11 Sub-Areas

96260 PINEY ISLAND DR, FERNANDINA BEACH

BLD DATE		LGL DATE	
XF DATE		LAND DATE	04/15/2025 MLU
INC DATE		AG DATE	

VALUATION SUMMARY

VALUATION BY		STANDARD
Tax Group: 7	Tax Dist:	
BUILDING MARKET VALUE		511,018
TOTAL MARKET OB/XF VALUE		33,738
TOTAL LAND VALUE - MARKET		160,000
TOTAL MARKET VALUE		704,756
SOH/AGL Deduction		366,766
ASSESSED VALUE		337,990
TOTAL EXEMPTION VALUE	HX HB WX	55,722
BASE TAXABLE VALUE		282,268
TOTAL JUST VALUE		704,756
NCON VALUE		0
INCOME VALUE		
PREVIOUS YEAR MKT VALUE		671,854

PERMIT NUM	DESCRIPTION	AMT	ISSUED
22001390	REPAIR/RRF	13,000	01/24/2022
006762	SWIM POOL	25,500	01/01/2000
996282	NEW CONSTR	206,250	07/01/1999

SALES DATA

OFF RECORD Number	DATE	TYPE INST	Q / U	V / I	RSN CD	SALE PRICE
2583/1430	7/25/2022	WD	U	I	11	100
GRANTOR: DAVIS PEGGY T						
GRANTEE: DAVIS PEGGY T LIVIN						
0855/0350	11/09/1998	WD	Q	V		38,500
GRANTOR: WHITAKER D BRETT & JE						
GRANTEE: DAVIS JOHN E & PEGG						

BUILDING NOTES

BUILDING DIMENSIONS

UOP=[YR=2000] W4 FOP=[YR=2000] N1 W11 BAS=[YR=2000] W12 FSP=[YR=2000] N30 W5 FGR=[YR=2000] N17 W5 N5 W23 S5 W2 S17 E13 S5E4 N5 E13 $ W9 S30 E14 $ W14 N30 W4 S5 W4 N5 W12 S28 W1 S12 E8 S9 E6 S7 E8 S8 E12 FOP=[YR=2000] S7 E3 UOP=[YR=2000] S8 E6 N8 W6 $ E9 N7 W12 $ E24 N24 W11 N10 $ S10 E11 N9$ S8 E4 N8 $ PTR= E15 FUS=[YR=2000] E23 N3 E9 S3 E3 FOP=[YR=2000] N10 E10 S10 W10 $ E13S33 W12 FOP=[YR=2000] S6 W12 N6 E12$ W24 N14 W12 N19 $ W15 $ PTR=E58 FUS=[YR=2000] E18 S30 W18 N30 $W58 $.

EXTRA FEATURES

LN	OB/XF CODE	DESCRIPTION	BLD	CAP	L	W	UNITS	UT	Adj R	ADJ UNIT PRICE	ORIG COND	YEAR ON	YEAR ACTUAL	Q	% COND	OB/XF MKT VALUE	NOTES
1	0500	FP-PRE FAB	0	100	0	0	1.00	UT	3,500.00	3,500.00	100	2000	2000	3	83	2,905	
2	0962	SKYLIGHT	0	100	0	0	3.00	UT	250.00	250.00	100	2000	2000	3	77	578	
3	0812	CONCRETE C	0	100	0	0	4,815.00	SF	4.00	4.00	100	2000	2000	3	77	14,830	
4	0845	KOOL DECK	0	100	0	0	970.00	SF	7.25	7.25	100	2000	2000	3	77	5,415	
5	0861	POOL GUNIT	0	100	32	16	512.00	SF	85.00	85.00	100	2000	2000	3	23	10,010	

LAND DESCRIPTION

TOTAL OB/XF 33,738

LN	USE CODE	CLS	LAND USE DESCRIPTION	CAP	RD	LOC ZONE	FRONT	DEPTH	TOT LND UTS	UNIT TYPE	DT	DPTH FACT	% COND	TOT ADJ	UNIT PRICE	ADJ UNIT PRICE	LAND VALUE	OTHER ADJUSTMENTS AND NOTES	YEAR	DENSITY	DECL	FRZ	YR	CONSRV
1	000100	C	RES	100		RSF-1	0.00	0.00	1.00	LT		1.00	1.00	1.00	160,000.00	160,000.00	160,000							

REVIEW DATE 05/12/2019 BY KBA Total Acres: 0.00 Total Land Value: 160,000 Market: 0 Agricultural: 0 Common: 160,000 PRINTED 07/30/2025 BY SYS