LOT 37
LITTLE PINEY ISLAND PB 5/81

OCHS STEPHAN L & JUDITH S
97053 LITTLE PINEY ISLAND CT
FERNANDINA BEACH, FL 32034

2025

47-3N-28-5000-0037-0000

BUILDING CHARACTERISTICS

ELEMENT	CD	CONSTRUCTION
Exterior Wall	10	ABOVE AVG 70
Exterior Wall	06	BD/BATTEN 30
Roof Structur	08	IRREGULAR 100
Roof Cover	03	COMP SHNGL 100
Interior Wall	05	DRYWALL 100
Interior Floo	12	HARDWOOD 70
Interior Floo	11	CLAY TILE 30
Air Condition	03	CENTRAL 100
Heating Type	04	AIR DUCTED 100
Bedrooms		5 100
Bathrooms		4 100
Frame	02	WOOD FRAME 100
Stories	1.5	1.5 100
Units		0 100
Occupancy	00	NONE 100
Quality	04	Quality Level 04
DOR CODE	0100	SINGLE FAMILY
MAP NUM		MKT AREA 04
NEIGHBORHOOD/LOC	4016.00	

AREA TYPE	TOTAL GROSS AREA	PCT OF BASE	YEAR	TOT ADJ AREA	SUBAREA MARKET VALUE
BAS	3,275	100	2005	3,275	402,464
DCK	319	10	2005	32	3,933
FOP	55	30	2005	16	1,966
FOP	129	30	2005	39	4,793
FSP	334	40	2005	134	16,468
FUS	697	100	2020	697	85,655
PTO	156	5	2005	8	983
UGR	755	45	2005	340	41,782
UOP	220	20	2005	44	5,407
USP	171	30	2005	51	6,267
TOTALS	6,312			4,726	580,778

MARKET ADJUSTMENTS

TYPE	MDL	EFF. AREA	TOT ADJ PTS	EFF. BASE RATE	REPL. COST NEW	AYB	EYB	ECON	FNCT		NORM	% COND
0900	01	4,726	104.1159	137.43	649,494	2005	2005	0	0	0	10.58	89.42

1 SNGL FAM – 100% - 2023 Heated Area: 3972 HX Base Yr 2023

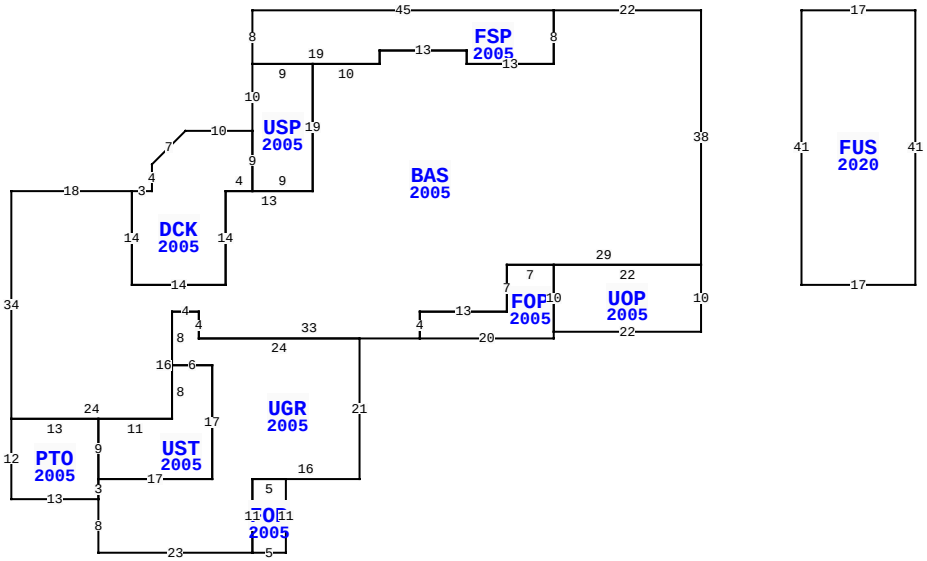

** This building has 11 Sub-Areas

97053 LITTLE PINEY ISLAND CT, FERNANDINA BEACH

BLD DATE		LGL DATE	
XF DATE		LAND DATE	04/15/2025 MLU
INC DATE		AG DATE	

NASSAU COUNTY PROPERTY

PAGE 1 of 1 7

VALUATION SUMMARY

VALUATION BY		STANDARD
Tax Group: 7	Tax Dist:	
BUILDING MARKET VALUE		580,778
TOTAL MARKET OB/XF VALUE		18,682
TOTAL LAND VALUE - MARKET		160,000
TOTAL MARKET VALUE		759,460
SOH/AGL Deduction		142,095
ASSESSED VALUE		617,365
TOTAL EXEMPTION VALUE	HX HB	50,722
BASE TAXABLE VALUE		566,643
TOTAL JUST VALUE		759,460
NCON VALUE		0
INCOME VALUE		
PREVIOUS YEAR MKT VALUE		722,452

PERMIT NUM	DESCRIPTION	AMT	ISSUED
B0412644	NEW CONSTR	400,000	04/01/2004

SALES DATA

OFF RECORD Number	DATE	TYPE INST	Q / U	V / I	RSN CD	SALE PRICE
2364/0068	5/28/2020	WD	Q	I	01	640,000
GRANTOR: SHUSTER ARTHUR & THER						
GRANTEE: OCHS STEPHAN L & JU						
2020/0489	12/09/2015	QC	U	I	11	100
GRANTOR: SHUSTER ARTHUR						
GRANTEE: SHUSTER ARTHUR & TH						

BUILDING NOTES

BUILDING DIMENSIONS

BAS=[YR=2005] W22 FSP=[YR=2005] W45 S8 USP=[YR=2005] S10 DCK=[YR=2005] W10 L5 D5 S4 W3 S14 E14 N14 E4 N9$ S9 E9 N19 W9$ E19 N2 E13 S2 E13 N8$ S8 W13 N2 W13 S2 W10 S19 W13 S14 W14 N14 W18 S34 PTO=[YR=2005] S12 E13 UGR=[YR=2005] S8 E23 FOP=[YR=2005] E5 N11 W5 S11$ N11 E16 N21 W24 N4 W4 S8 E6 S17 W17 S3$ N3 UST=[YR=2005] E17 N17 W6 S8 W11 S9$ N9 W13$ E24 N16 E4 S4 E33 FOP=[YR=2005] E20 N1 UOP=[YR=2005] E22 N10 W22 S10$ N10 W7 S7 W13 S4$ N4 E13 N7 E29 N38$ PTR= E15 FUS=[YR=2020] E17 S41 W17 N41$ W15$.

EXTRA FEATURES

LN	OB/XF CODE	DESCRIPTION	BLD	CAP	L	W	UNITS	UT	Adj R	ADJ UNIT PRICE	ORIG COND	YEAR ON	YEAR ACTUAL	Q	% COND	OB/XF MKT VALUE	NOTES
1	0504	FP-ELECTRI	0	100	0	0	1.00	UT	2,000.00	2,000.00	100	2005	2005	3	88	1,760	
2	0858	SCULP CONC	0	100	0	0	643.00	SF	13.00	13.00	100	2005	2005	3	96	8,025	
3	0812	CONCRETE C	0	100	0	0	2,468.00	SF	4.00	4.00	100	2005	2005	3	84	8,292	
4	1126	CB/STC 8"	0	100	18	0	90.00	SF	8.00	8.00	100	2005	2005	3	84	605	

LAND DESCRIPTION

TOTAL OB/XF 18,682

LN	USE CODE	CLS	LAND USE DESCRIPTION	CAP	RD	LOC ZONE	FRONT	DEPTH	TOT LND UTS	UNIT TYPE	DT	DPTH FACT	% COND	TOT ADJ	UNIT PRICE	ADJ UNIT PRICE	LAND VALUE	OTHER ADJUSTMENTS AND NOTES	YEAR	DENSITY	DECL	FRZ	YR	CONSRV
1	000100	C	RES	100		RSF-1	0.00	0.00	1.00	LT		1.00	1.00	1.00	160,000.00	160,000.00	160,000							

REVIEW DATE 05/27/2021 BY KWA Total Acres: 0.00 Total Land Value: 160,000 Market: 0 Agricultural: 0 Common: 160,000 PRINTED 07/30/2025 BY SYS