LOT 22
IN OR 2135/1973
LITTLE PINEY ISLAND PB 5/81

PETERSON DAVID A & ANNE A
96303 PINEY ISLAND DR
FERNANDINA BEACH, FL 32034

2025

47-3N-28-5000-0022-0000

NASSAU COUNTY PROPERTY

BUILDING CHARACTERISTICS

ELEMENT	CD	CONSTRUCTION
Exterior Wall	31	HARDIE BRD 100
Roof Structur	08	IRREGULAR 100
Roof Cover	03	COMP SHNGL 90
Roof Cover	13	STAND SEAM 10
Interior Wall	05	DRYWALL 100
Interior Floo	11	CLAY TILE 70
Interior Floo	14	CARPET 30
Air Condition	03	CENTRAL 100
Heating Type	04	AIR DUCTED 100
Bedrooms		3 100
Bathrooms		2.5 100
Frame	02	WOOD FRAME 100
Stories	2.	2. 100
Units		0 100
Quality	03	Quality Level 03
DOR CODE	0100	SINGLE FAMILY
MAP NUM		MKT AREA 04
NEIGHBORHOOD/LOC	4016.00	

AREA TYPE	TOTAL GROSS AREA	PCT OF BASE	YEAR	TOT ADJ AREA	SUBAREA MARKET VALUE
BAS	2,095	100	2017	2,095	429,373
FGR	582	55	2017	320	65,585
FOP	296	30	2017	89	18,241
FST	100	55	2017	55	11,272
FUS	400	100	2017	400	81,981
FUS	904	100	2017	904	185,276
STR	27	10	2017	3	615
STR	32	10	2017	3	615
UOP	276	20	2017	55	11,272
TOTALS	4,712			3,924	804,229

MARKET ADJUSTMENTS

TYPE	MDL	EFF. AREA	TOT ADJ PTS	EFF. BASE RATE	REPL. COST NEW	AYB	EYB	ECON	FNCT		NORM	% COND
0500	11	3,924	133.7310	211.29	829,102	2017	2017	0	0	0	3.00	97.00

1 SFR CUST – 100% - 2018 Heated Area: 3399 HX Base Yr 2018

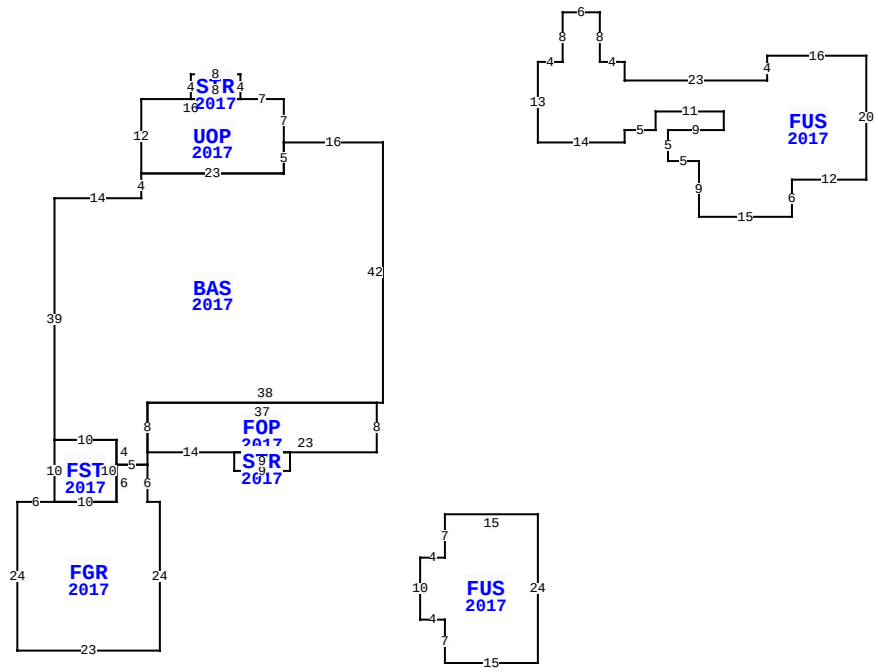

96303 PINEY ISLAND DR, FERNANDINA BEACH

BLD DATE		LGL DATE	
XF DATE		LAND DATE	04/15/2025 MLU
INC DATE		AG DATE	

VALUATION SUMMARY

VALUATION BY		STANDARD
Tax Group: 7	Tax Dist:	
BUILDING MARKET VALUE		804,229
TOTAL MARKET OB/XF VALUE		13,718
TOTAL LAND VALUE - MARKET		275,000
TOTAL MARKET VALUE		1,092,947
SOH/AGL Deduction		375,048
ASSESSED VALUE		717,899
TOTAL EXEMPTION VALUE	HX HB	50,722
BASE TAXABLE VALUE		667,177
TOTAL JUST VALUE		1,092,947
NCON VALUE		0
INCOME VALUE		
PREVIOUS YEAR MKT VALUE		986,336

PERMIT NUM	DESCRIPTION	AMT	ISSUED
B1632464	CO ISSUED	0	07/26/2017
B1632464	NEW CONSTR	430,758	06/08/2016

SALES DATA

OFF RECORD Number	DATE	TYPE INST	Q U	V I	RSN CD	SALE PRICE
2135/1973	7/12/2017	WD	Q	I	01	675,000
GRANTOR: AMELIA ISLAND DEVELOP						
GRANTEE: PETERSON DAVID A &						
1754/1436	9/01/2011	WD	Q	V	02	40,000
GRANTOR: DUNBAR BRIAN						
GRANTEE: AMELIA ISLAND DEVEL						

BUILDING NOTES

BUILDING DIMENSIONS

BAS=[YR=2017] W16 UOP=[YR=2017] N7 W7 STR=[YR=2017] N4 W8 S4 E8$ W16 S12 E23 N5$ S5 W23 S4 W14 S39 FST=[YR=2017] S10 FGR=[YR=2017] W6 S24 E23 N24 W2 N6 W5 S6 W10$ E10 N10 W10$ E10 S4 E5 N2 FOP=[YR=2017] E14 STR=[YR=2017] S3 E9 N3 W9$ E23 N8 W37 S8$ N8 E38 N42$ PTR = E25 FUS=[YR=2017] N13 E4 N8 E6 S8 E4 S3 E23 N4 E16 S20 W12 S6 W15 N9 W5 N5 E9 N3 W11 S3 W5 S2 W14$ W25$ PTR = E25 S60 FUS=[YR=2017] W15 S7 W4 S10 E4 S7 E15 N24$ W25 N60$.

EXTRA FEATURES

LN	OB/XF CODE	DESCRIPTION	BLD	CAP	L	W	UNITS	UT	Adj R	ADJ UNIT PRICE	ORIG COND	YEAR ON	YEAR ACTUAL	Q	% COND	OB/XF MKT VALUE	NOTES
1	0500	FP-PRE FAB	0	100	0	0	1.00	UT	3,500.00	3,500.00	100	2017	2017	3	97	3,395	
2	0811	CONCRETE B	0	100	0	0	2,068.00	SF	5.20	5.20	100	2017	2017	3	96	10,323	

LAND DESCRIPTION

TOTAL OB/XF 13,718

LN	USE CODE	CLS	LAND USE DESCRIPTION	CAP	RD	LOC ZONE	FRONT	DEPTH	TOT LND UTS	UNIT TYPE	DT	DPTH FACT	% COND	TOT ADJ	UNIT PRICE	ADJ UNIT PRICE	LAND VALUE	OTHER ADJUSTMENTS AND NOTES	YEAR	DENSITY	DECL	FRZ	YR	CONSRV
1	000116	C	RES MARSH	100		RSF-1	0.00	0.00	1.00	LT		1.00	1.00	1.00	275,000.00	275,000.00	275,000							

REVIEW DATE 02/29/2024 BY NWA Total Acres: 0.00 Total Land Value: 275,000 Market: 0 Agricultural: 0 Common: 275,000 PRINTED 07/30/2025 BY SYS