LOT 20
LITTLE PINEY ISLAND PB 5/81

WILSON ANTHONY M & KATHRYN B
96295 PINEY ISLAND DRIVE
FERNANDINA BEACH, FL 32034

2025

47-3N-28-5000-0020-0000

NASSAU COUNTY PROPERTY

BUILDING CHARACTERISTICS

ELEMENT	CD	CONSTRUCTION
Exterior Wall	31	HARDIE BRD 70
Exterior Wall	17	CB STUCCO 30
Roof Structur	08	IRREGULAR 100
Roof Cover	03	COMP SHNGL 100
Interior Wall	05	DRYWALL 100
Interior Floo	11	CLAY TILE 50
Interior Floo	12	HARDWOOD 50
Air Condition	03	CENTRAL 100
Heating Type	04	AIR DUCTED 100
Bedrooms		4 100
Bathrooms		3.5 100
Frame	02	WOOD FRAME 100
Stories	2.	2. 100
Units		0 100
Occupancy	00	NONE 100
Quality	03	Quality Level 03

DOR CODE	0100	SINGLE FAMILY	
MAP NUM		MKT AREA	04
NEIGHBORHOOD/LOC	4016.00		

AREA TYPE	TOTAL GROSS AREA	PCT OF BASE	YEAR	TOT ADJ AREA	SUBAREA MARKET VALUE
BAS	2,342	100	2003	2,342	335,864
DCK	211	10	2003	21	3,012
FGR	705	55	2003	388	55,643
FOP	209	30	2003	63	9,035
FSP	240	40	2003	96	13,767
FUS	1,521	100	2003	1,521	218,126
UOP	56	20	2003	11	1,577
UST	240	45	2003	108	15,488
UST	552	45	2003	248	35,566
TOTALS	6,076			4,798	688,077

MARKET ADJUSTMENTS

TYPE	MDL	EFF. AREA	TOT ADJ PTS	EFF. BASE RATE	REPL. COST NEW	AYB	EYB	ECON	FNCT		NORM	% COND
0500	01	4,798	101.2220	159.93	767,344	2003	2003	0	0	0	10.33	89.67

1 SFR CUST – 100% - 2021 Heated Area: 3863 HX Base Yr 2021

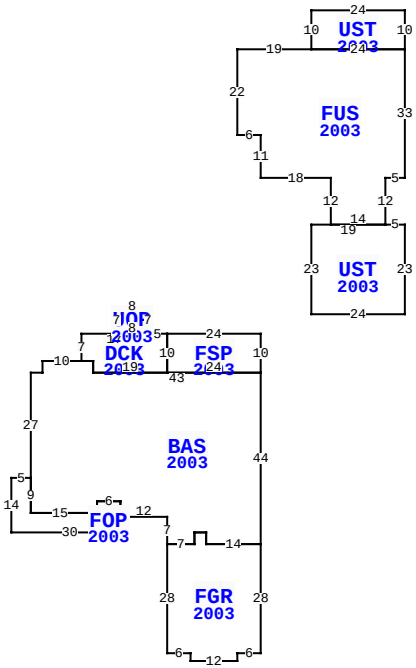

96295 PINEY ISLAND DR, FERNANDINA BEACH

BLD DATE		LGL DATE	
XF DATE		LAND DATE	04/15/2025 MLU
INC DATE		AG DATE	

EXTRA FEATURES

LN	OB/XF CODE	DESCRIPTION	BLD	CAP	L	W	UNITS	UT	Adj R	ADJ UNIT PRICE	ORIG COND	YEAR ON	YEAR ACTUAL	Q	% COND	OB/XF MKT VALUE	NOTES
1	0500	FP-PRE FAB	0	100	0	0	1.00	UT	3,500.00	3,500.00	100	2003	2003	3	86	3,010	
2	0810	CONCRETE A	0	100	16	4	64.00	SF	6.50	6.50	100	2003	2003	3	82	341	
3	0812	CONCRETE C	0	100	0	0	1,974.00	SF	4.00	4.00	100	2003	2003	3	82	6,475	
4	0920	CWALL-WD/M	0	100	0	0	92.00	LF	195.00	195.00	100	2003	2003	3	20	3,588	

VALUATION SUMMARY

VALUATION BY		STANDARD
Tax Group: 7	Tax Dist:	
BUILDING MARKET VALUE		688,077
TOTAL MARKET OB/XF VALUE		13,414
TOTAL LAND VALUE - MARKET		261,250
TOTAL MARKET VALUE		962,741
SOH/AGL Deduction		348,467
ASSESSED VALUE		614,274
TOTAL EXEMPTION VALUE	HX HB	50,722
BASE TAXABLE VALUE		563,552
TOTAL JUST VALUE		962,741
NCON VALUE		0
INCOME VALUE		
PREVIOUS YEAR MKT VALUE		865,331

PERMIT NUM	DESCRIPTION	AMT	ISSUED
B0210325	CO ISSUED	309,349	01/09/2004
B0210325	NEW CONSTR	309,349	11/01/2002

SALES DATA

OFF RECORD Number	DATE	TYPE INST	Q U	V I	RSN CD	SALE PRICE
2388/0856	8/28/2020	WD	Q	I	01	641,000
GRANTOR: BEAN WARREN C & LUCRE						
GRANTEE: WILSON ANTHONY M &						
0819/1354	1/14/1998	WD	Q	V		39,000
GRANTOR: NORMAN DANIEL E ETAL						
GRANTEE: BEAN WARREN C & LUC						

BUILDING NOTES

BUILDING DIMENSIONS

FSP=[YR=2003] W24 DCK=[YR=2003] W5 UOP=[YR=2003] N7 W8 S7 E8$ W17 S7 BAS=[YR=2003] W10 S3 W3 S27 FOP=[YR=2003] W5 S14 E30 N4 W2 N4 W6 S4 W2 N1 W15 N9$ S9 E15 S1 E2 N4 E6 S4 E12 S7 FGR=[YR=2003] S28 E6 S2 E12 N2 E6 N28 W14 N3 W3 S3 W7$ E7 N3 E3 S3 E14 N44 W43 N3 W3$ E3 S3 E19 N10$ S10 E24 N10$ PTR=N40 FUS=[YR=2003] N11 W6 N22 E19 UST=[YR=2003] N10 E24 S10 W24$ E24 S33 W5 S12 UST=[YR=2003] E5 S23 W24 N23 E19$ W14 N12 W18$ S40$.

LAND DESCRIPTION

TOTAL OB/XF 13,414

LN	USE CODE	CLS	LAND USE DESCRIPTION	CAP	RD	LOC ZONE	FRONT	DEPTH	TOT LND UTS	UNIT TYPE	DT	DPTH FACT	% COND	TOT ADJ	UNIT PRICE	ADJ UNIT PRICE	LAND VALUE	OTHER ADJUSTMENTS AND NOTES	YEAR	DENSITY	DECL	FRZ	YR	CONSRV
1	000116	C	RES MARSH	100		RSF-1	0.00	0.00	1.00	LT		1.00	1.00	0.95	275,000.00	261,250.00	261,250							

REVIEW DATE 05/12/2019 BY KBA Total Acres: 0.00 Total Land Value: 261,250 Market: 0 Agricultural: 0 Common: 261,250 PRINTED 07/30/2025 BY SYS