LOT 10
LITTLE PINEY ISLAND PB 5/81

DICIOCCIO JASON/ROUSE MOLLY E
330 S FLETCHER AVE
FERNANDINA BEACH, FL 32034

2025

47-3N-28-5000-0010-0000

NASSAU COUNTY PROPERTY

BUILDING CHARACTERISTICS

ELEMENT	CD	CONSTRUCTION
Exterior Wall	10	ABOVE AVG 100
Roof Structur	08	IRREGULAR 100
Roof Cover	03	COMP SHNGL 100
Interior Wall	05	DRYWALL 100
Interior Floo	14	CARPET 70
Interior Floo	12	HARDWOOD 30
Air Condition	03	CENTRAL 100
Heating Type	04	AIR DUCTED 100
Bedrooms		3 100
Bathrooms		2 100
Frame	02	WOOD FRAME 100
Stories	2.	2. 100
Units		0 100
Occupancy	00	NONE 100
Quality	03	Quality Level 03
DOR CODE	0100	SINGLE FAMILY
MAP NUM		MKT AREA 04
NEIGHBORHOOD/LOC	4016.00	

AREA TYPE	TOTAL GROSS AREA	PCT OF BASE	YEAR	TOT ADJ AREA	SUBAREA MARKET VALUE
BAS	1,482	100	1993	1,482	201,096
FGR	532	55	1993	293	39,758
FOP	264	30	1993	79	10,719
FSP	98	40	1993	39	5,292
FST	50	55	1993	28	3,800
FUS	1,110	100	1993	1,110	150,619
UOP	314	20	1993	63	8,549
TOTALS	3,850			3,094	419,832

MARKET ADJUSTMENTS

TYPE	MDL	EFF. AREA	TOT ADJ PTS	EFF. BASE RATE	REPL. COST NEW	AYB	EYB	ECON	FNCT		NORM	% COND
0500	01	3,094	100.7400	159.17	492,472	1993	1993	0	0	0	14.75	85.25

1 SFR CUST – 0% - 0 Heated Area: 2592 HX Base Yr

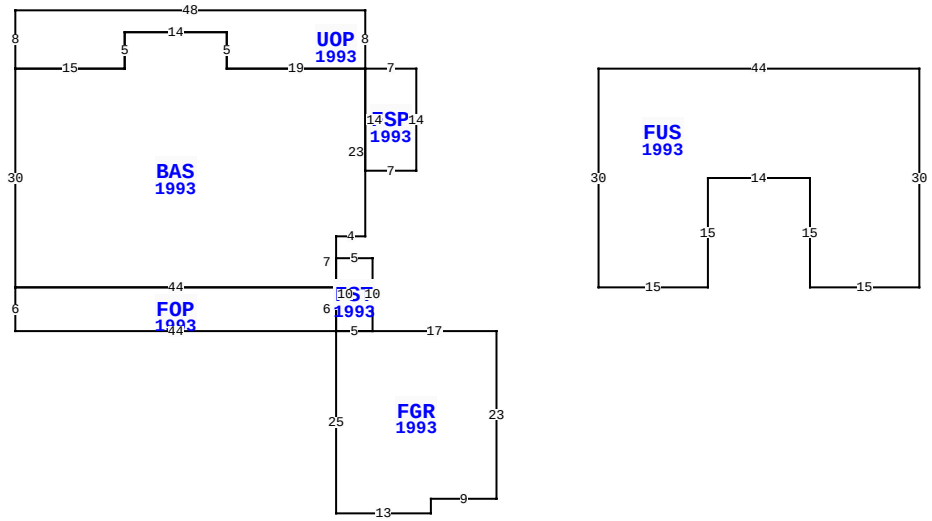

96261 PINEY ISLAND DR, FERNANDINA BEACH

BLD DATE		LGL DATE	
XF DATE		LAND DATE	04/15/2025 MLU
INC DATE		AG DATE	

VALUATION SUMMARY

VALUATION BY	STANDARD
Tax Group: 7	Tax Dist:
BUILDING MARKET VALUE	419,832
TOTAL MARKET OB/XF VALUE	11,843
TOTAL LAND VALUE - MARKET	275,000
TOTAL MARKET VALUE	706,675
SOH/AGL Deduction	81,446
ASSESSED VALUE	625,229
TOTAL EXEMPTION VALUE	0
BASE TAXABLE VALUE	625,229
TOTAL JUST VALUE	706,675
NCON VALUE	0
INCOME VALUE	
PREVIOUS YEAR MKT VALUE	678,256

PERMIT NUM	DESCRIPTION	AMT	ISSUED

SALES DATA

OFF RECORD Number	DATE	TYPE INST	Q / U	V / I	RSN CD	SALE PRICE
2254/0833	2/11/2019	WD	Q	I	01	495,000
GRANTOR: ANDERSON DIANE A						
GRANTEE: DICIOCCIO JASON & M						
2206/1269	6/08/2018	TD	U	I	11	100
GRANTOR: ANDERSEN SIGURD P LIV						
GRANTEE: ANDERSON DIANE A						

BUILDING NOTES

BUILDING DIMENSIONS

FSP=[YR=1993] W7 UOP=[YR=1993] N8 W48 S8 BAS=[YR=1993] S30
FOP=[YR=1993] S6 E44 FGR=[YR=1993] S25 E13 N2 E9 N23 W17
FST=[YR=1993] N10 W5 S10 E5 $ W5$N6 W44 $ E44 N7 E4 N23 W19
N5 W14 S5 W15 $ E15 N5 E14 S5 E19 $ S14 E7 N14 $ PTR= E25
FUS=[YR=1993] E44 S30 W15 N15 W14 S15 W15 N30 $ W25 $.

EXTRA FEATURES

LN	OB/XF CODE	DESCRIPTION	BLD	CAP	L	W	UNITS	UT	Adj R	ADJ UNIT PRICE	ORIG COND	YEAR ON	YEAR ACTUAL	Q	% COND	OB/XF MKT VALUE	NOTES
1	0500	FP-PRE FAB	0	0	0	0	1.00	UT	3,500.00	3,500.00	100	1993	1993	3	72	2,520	
2	0812	CONCRETE C	0	0	0	0	2,976.00	SF	4.00	4.00	100	1993	1993	3	64	7,619	
3	0825	BRICK	0	0	0	0	108.00	SF	12.50	12.50	100	1999	1999	3	93	1,256	
4	1242	WD DECK A	0	0	14	16	224.00	SF	10.00	10.00	100	1999	1999	3	20	448	

LAND DESCRIPTION

TOTAL OB/XF 11,843

LN	USE CODE	CLS	LAND USE DESCRIPTION	CAP	RD	LOC ZONE	FRONT	DEPTH	TOT LND UTS	UNIT TYPE	DT	DPTH FACT	% COND	TOT ADJ	UNIT PRICE	ADJ UNIT PRICE	LAND VALUE	OTHER ADJUSTMENTS AND NOTES	YEAR	DENSITY	DECL	FRZ	YR	CONSRV
1	000116	C	RES MARSH	0		RSF-1	0.00	0.00	1.00	LT		1.00	1.00	1.00	275,000.00	275,000.00	275,000							

REVIEW DATE 05/12/2019 BY KBA Total Acres: 0.00 Total Land Value: 275,000 Market: 0 Agricultural: 0 Common: 275,000 PRINTED 07/30/2025 BY SYS