PT LOTS 4 & 5 IN OR 2736/1015
SHADY GROVE PBK 6/13

BARBER LADONNA K L/E/
45101 AMERICAN DREAM DR
CALLAHAN, FL 32011

2025

47-2N-25-720S-0004-0030

BUILDING CHARACTERISTICS

ELEMENT	CD	CONSTRUCTION
Exterior Wall	20	FACE BRICK 100
Roof Structur	03	GABLE/HIP 100
Roof Cover	03	COMP SHNGL 100
Interior Wall	05	DRYWALL 100
Interior Floo	11	CLAY TILE 50
Interior Floo	14	CARPET 50
Air Condition	03	CENTRAL 100
Heating Type	04	AIR DUCTED 100
Bedrooms		4 100
Bathrooms		3 100
Frame	02	WOOD FRAME 100
Stories	1.5	1.5 100
Units		0 100
Occupancy	00	NONE 100
Quality	05	Quality Level 05

DOR CODE 0100 SINGLE FAMILY
MAP NUM | MKT AREA 08
NEIGHBORHOOD/LOC 8018.00

AREA TYPE	TOTAL GROSS AREA	PCT OF BASE	YEAR	TOT ADJ AREA	SUBAREA MARKET VALUE
BAS	2,622	100	2004	2,622	345,144
FGR	1,333	55	2004	733	96,488
FOP	210	30	2004	63	8,293
FUS	516	100	2004	516	67,923
TOTALS	4,681			3,934	517,848

MARKET ADJUSTMENTS

TYPE	MDL	EFF. AREA	TOT ADJ PTS	EFF. BASE RATE	REPL. COST NEW	AYB	EYB	ECON	FNCT		NORM	% COND
0900	01	3,934	112.3650	148.32	583,491	2004	2009	0	0	0	11.25	88.75

1 SNGL FAM – 100% - 2013 Heated Area: 3138 HX Base Yr 2013

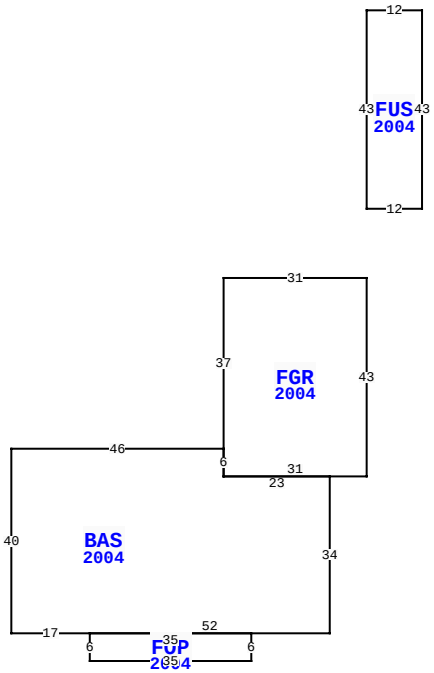

45101 AMERICAN DREAM DR, CALLAHAN

BLD DATE		LGL DATE	
XF DATE		LAND DATE	
INC DATE		AG DATE	

NASSAU COUNTY PROPERTY

PAGE 1 of 1 6

VALUATION SUMMARY

VALUATION BY		STANDARD
Tax Group: 6	Tax Dist:	
BUILDING MARKET VALUE		517,848
TOTAL MARKET OB/XF VALUE		53,296
TOTAL LAND VALUE - MARKET		60,000
TOTAL MARKET VALUE		631,144
SOH/AGL Deduction		337,561
ASSESSED VALUE		293,583
TOTAL EXEMPTION VALUE	HX HB WX	55,722
BASE TAXABLE VALUE		237,861
TOTAL JUST VALUE		631,144
NCON VALUE		0
INCOME VALUE		
PREVIOUS YEAR MKT VALUE		610,532

PERMIT NUM	DESCRIPTION	AMT	ISSUED
21008457	REPAIR/RRF	29,000	06/28/2021
B12206	NEW CONSTR	185,908	01/01/2004
R5751	REPAIR/RRF	3,000	01/01/2004
B12085	FOUNDATION	2,500	12/17/2003

SALES DATA

OFF RECORD Number	DATE	TYPE INST	Q / U	V / I	RSN CD	SALE PRICE
2736/1015	9/09/2024	LE	U	I	11	100
GRANTOR: BARBER LADONNA KAYE						
GRANTEE: BARBER LADONNA KAYE						
1811/1749	8/27/2012	WD	U	I	38	175,000
GRANTOR: THE BANK OF NEW YORK						
GRANTEE: BARBER JAMES D & LA						

BUILDING NOTES

BUILDING DIMENSIONS

FGR=[YR=2004] W31 S37 BAS=[YR=2004] W46 S40 E17 FOP=[YR=2004] S6 E35 N6 W35$ E52 N34 W23 N6$ S6 E31 N43$ PTR=N15 FUS=[YR=2004] N43 E12 S43 W12$ S15$.

EXTRA FEATURES

LN	OB/XF CODE	DESCRIPTION	BLD	CAP	L	W	UNITS	UT	Adj R	ADJ UNIT PRICE	ORIG COND	YEAR ON	YEAR ACTUAL	Q	% COND	OB/XF MKT VALUE	NOTES
1	0500	FP-PRE FAB	0	100	0	0	1.00	UT	3,500.00	3,500.00	100	2004	2004	3	87	3,045	
2	0812	CONCRETE C	0	100	0	0	5,894.00	SF	4.00	4.00	100	2004	2004	3	83	19,568	
3	1127	BRICK 8"	0	100	0	0	25.00	SF	11.00	11.00	100	2004	2004	3	95	261	
4	0861	POOL GUNIT	0	100	32	16	512.00	SF	85.00	85.00	100	2004	2004	3	32	13,926	
5	0845	KOOL DECK	0	100	0	0	1,260.00	SF	7.25	7.25	100	2004	2004	3	83	7,582	
6	0470	VNYL GATE	0	100	0	0	2.00	UT	300.00	300.00	100	2004	2004	3	61	366	
7	0476	VF 6 SBPL	0	100	0	0	156.00	LF	32.00	32.00	100	2004	2004	3	61	3,045	
8	1242	WD DECK A	0	100	0	0	220.00	SF	11.50	11.50	100	2006	2006	3	24	607	
9	0751	UOP	0	100	10	20	200.00	SF	10.00	10.00	100	2006	2006	3	40	800	
10	0300	BOAT DCK W	0	100	0	0	160.00	SF	40.00	40.00	100	2012	2012	3	64	4,096	

TOTAL OB/XF 53,296

LAND DESCRIPTION

LN	USE CODE	CLS	LAND USE DESCRIPTION	CAP	RD	LOC ZONE	FRONT	DEPTH	TOT LND UTS	UNIT TYPE	DT	DPTH FACT	% COND	TOT ADJ	UNIT PRICE	ADJ UNIT PRICE	LAND VALUE	OTHER ADJUSTMENTS AND NOTES	YEAR	DENSITY	DECL	FRZ	YR	CONSRV
1	000100	C	RES	100		OR	0.00	0.00	1.00	LT		1.00	1.00	1.00	60,000.00	60,000.00	60,000							

REVIEW DATE 02/01/2022 BY KBA Total Acres: 0.00 Total Land Value: 60,000 Market: 0 Agricultural: 0 Common: 60,000 PRINTED 07/30/2025 BY SYS