IN OR 1256/1607

NECHVATAL CYNTHIA L
45207 IRVIN ROAD
CALLAHAN, FL 32011

2025

47-2N-25-0000-0004-0040

BUILDING CHARACTERISTICS

ELEMENT	CD	CONSTRUCTION
Exterior Wall	20	FACE BRICK 100
Roof Structur	03	GABLE/HIP 100
Roof Cover	03	COMP SHNGL 100
Interior Wall	05	DRYWALL 100
Interior Floo	14	CARPET 90
Interior Floo	08	SHT VINYL 10
Air Condition	03	CENTRAL 100
Heating Type	04	AIR DUCTED 100
Bedrooms		3 100
Bathrooms		2 100
Frame	02	WOOD FRAME 100
Stories	1.	1. 100
Units		0 100
Occupancy	00	NONE 100
Quality	02	Quality Level 02
DOR CODE	0100	SINGLE FAMILY
MAP NUM		MKT AREA 08
NEIGHBORHOOD/LOC	8026.00	

AREA TYPE	TOTAL GROSS AREA	PCT OF BASE	YEAR	TOT ADJ AREA	SUBAREA MARKET VALUE
BAS	1,947	100	1993	1,947	204,141
FGR	484	55	1993	266	27,890
FOP	48	30	1993	14	1,468
PTO	120	5	1993	6	629
PTO	140	5	1993	7	734
TOTALS	2,739			2,240	234,861

MARKET ADJUSTMENTS

TYPE	MDL	EFF. AREA	TOT ADJ PTS	EFF. BASE RATE	REPL. COST NEW	AYB	EYB	ECON	FNCT		NORM	% COND
0900	01	2,240	100.5480	132.72	297,293	1991	1996	0	0	0	21.00	79.00

1 SNGL FAM – 100% - 0 Heated Area: 1947 HX Base Yr 1992

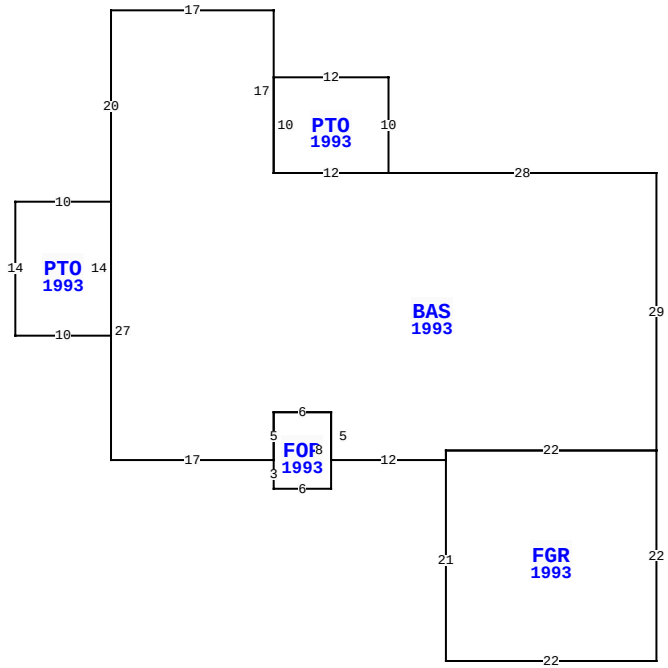

45207 IRVIN RD, CALLAHAN

BLD DATE	03/03/2023 NW	LGL DATE	
XF DATE		LAND DATE	05/09/2025 MLU
INC DATE		AG DATE	

NASSAU COUNTY PROPERTY

PAGE 1 of 1 6

VALUATION SUMMARY

VALUATION BY		STANDARD
Tax Group: 6	Tax Dist:	
BUILDING MARKET VALUE		234,861
TOTAL MARKET OB/XF VALUE		15,990
TOTAL LAND VALUE - MARKET		98,000
TOTAL MARKET VALUE		348,851
SOH/AGL Deduction		194,953
ASSESSED VALUE		153,898
TOTAL EXEMPTION VALUE	HX HB	50,722
BASE TAXABLE VALUE		103,176
TOTAL JUST VALUE		348,851
NCON VALUE		0
INCOME VALUE		
PREVIOUS YEAR MKT VALUE		339,194

PERMIT NUM	DESCRIPTION	AMT	ISSUED
20000877	REPAIR/RRF	17,500	01/30/2020
B1530220	GARAGE	23,833	04/01/2015
7345	NEW CONSTR	76,137	06/24/1991

SALES DATA

OFF RECORD Number	DATE	TYPE INST	Q U	V I	RSN CD	SALE PRICE
1256/1607	9/02/2004	QC	Q	I	01	100
GRANTOR: NECHVATAL STEVEN M &						
GRANTEE: NECHVATAL CYNTHIA L						
0570/1296	5/25/1989	WD	Q	V		25,500
GRANTOR: SHADY GROVE DIARY						
GRANTEE: NECHVATAL STEVEN &						

BUILDING NOTES

BUILDING DIMENSIONS

BAS=[YR=1993] W28 PTO=[YR=1993] N10 W12 S10 E12$ W12 N17 W17 S20 PTO=[YR=1993] W10 S14 E10 N14$ S27 E17 FOP=[YR=1993] S3 E6 N8 W6 S5$ N5 E6 S5 E12 FGR=[YR=1993] S21 E22 N22 W22 S1$ N1 E22 N29$.

EXTRA FEATURES

LN	OB/XF CODE	DESCRIPTION	BLD	CAP	L	W	UNITS	UT	Adj R	ADJ UNIT PRICE	ORIG COND	YEAR ON	YEAR ACTUAL	Q	% COND	OB/XF MKT VALUE	NOTES
1	0500	FP-PRE FAB	0	100	0	0	1.00	UT	3,500.00	3,500.00	100	1991	1991	3	68	2,380	
2	0810	CONCRETE A	0	100	0	0	300.00	SF	6.50	6.50	100	1991	1991	3	59.5	1,160	
3	0510	GARAGE WD-	0	100	20	20	400.00	SF	35.00	35.00	100	2015	2015	3	75	10,500	
4	0351	CARPORT MT	0	100	15	20	300.00	SF	10.00	10.00	100	2015	2015	3	65	1,950	

LAND DESCRIPTION

TOTAL OB/XF 15,990

LN	USE CODE	CLS	LAND USE DESCRIPTION	CAP	RD	LOC ZONE	FRONT	DEPTH	TOT LND UTS	UNIT TYPE	DT	DPTH FACT	% COND	TOT ADJ	UNIT PRICE	ADJ UNIT PRICE	LAND VALUE	OTHER ADJUSTMENTS AND NOTES	YEAR	DENSITY	DECL	FRZ	YR	CONSRV
1	000100	C	RES	100	0005	OR	0.00	0.00	2.80	AC		1.00	1.00	1.00	35,000.00	35,000.00	98,000							

REVIEW DATE 08/12/2020 BY KB Total Acres: 2.80 Total Land Value: 98,000 Market: 0 Agricultural: 0 Common: 98,000 PRINTED 07/30/2025 BY SYS