LOT 3
IN OR 1174/507
WATERS EDGE PB 6/263

CAMPBELL WALTER R IV & KIRSTEN B
96374 SPRINGWOOD LANE
FERNANDINA BEACH, FL 32034

2025

46-3N-28-6200-0003-0000

BUILDING CHARACTERISTICS

ELEMENT	CD	CONSTRUCTION
Exterior Wall	31	HARDIE BRD 100
Roof Structur	08	IRREGULAR 100
Roof Cover	03	COMP SHNGL 100
Interior Wall	05	DRYWALL 100
Interior Floo	13	LVT/LAMNT 100
Air Condition	03	CENTRAL 100
Heating Type	04	AIR DUCTED 100
Bedrooms		3 100
Bathrooms		2.5 100
Frame	02	WOOD FRAME 100
Stories	2.	2. 100
Units		0 100
Occupancy	00	NONE 100
Quality	06	Quality Level 06
DOR CODE	0100	SINGLE FAMILY
MAP NUM		MKT AREA 04
NEIGHBORHOOD/LOC	4021.00	

AREA TYPE	TOTAL GROSS AREA	PCT OF BASE	YEAR	TOT ADJ AREA	SUBAREA MARKET VALUE
BAS	1,722	100	2016	1,722	278,489
FGR	839	55	2016	461	74,555
FOP	52	30	2016	16	2,587
FOP	222	30	2016	67	10,836
FST	56	55	2016	31	5,013
STR	56	10	2016	6	971
STR	104	10	2016	10	1,617
UST	25	45	2016	11	1,778
UST	112	45	2016	50	8,087
UST	746	45	2016	336	54,339
TOTALS	3,934			2,710	438,273

MARKET ADJUSTMENTS

TYPE	MDL	EFF. AREA	TOT ADJ PTS	EFF. BASE RATE	REPL. COST NEW	AYB	EYB	ECON	FNCT		NORM	% COND
0900	01	2,710	126.9600	167.59	454,169	2016	2016	0	0	0	3.50	96.50

1 SNGL FAM – 100% - 2017 Heated Area: 1722 HX Base Yr 2017

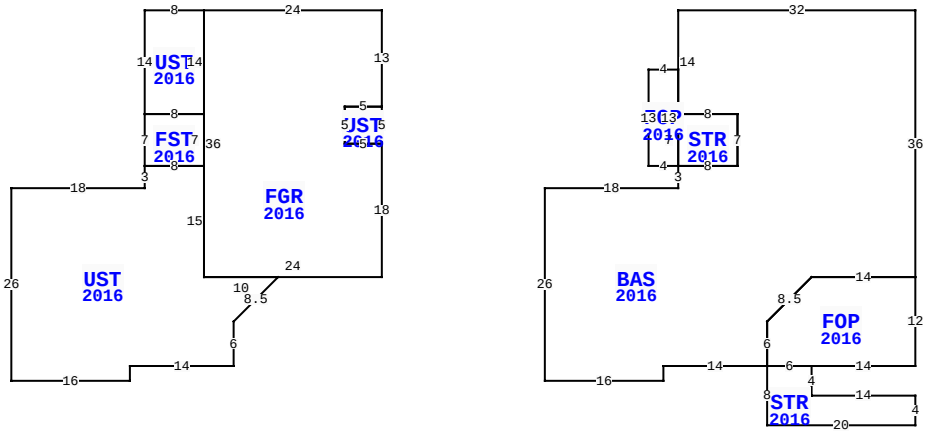

96374 SPRINGWOOD LN, FERNANDINA BEACH

BLD DATE		LGL DATE	
XF DATE		LAND DATE	05/06/2025 MLU
INC DATE		AG DATE	

NASSAU COUNTY PROPERTY

PAGE 1 of 1 4

VALUATION SUMMARY

VALUATION BY		STANDARD
Tax Group: 4	Tax Dist:	
BUILDING MARKET VALUE		438,273
TOTAL MARKET OB/XF VALUE		3,678
TOTAL LAND VALUE - MARKET		125,000
TOTAL MARKET VALUE		566,951
SOH/AGL Deduction		252,489
ASSESSED VALUE		314,462
TOTAL EXEMPTION VALUE	HX HB	50,722
BASE TAXABLE VALUE		263,740
TOTAL JUST VALUE		566,951
NCON VALUE		0
INCOME VALUE		
PREVIOUS YEAR MKT VALUE		479,616

PERMIT NUM	DESCRIPTION	AMT	ISSUED
B1631860	CO ISSUED	0	10/05/2016
B1631860	NEW CONSTR	293,099	02/01/2016

SALES DATA

OFF RECORD Number	DATE	TYPE INST	Q / U	V / I	RSN CD	SALE PRICE
1174/0507	9/22/2003	WD	Q	V		53,000
GRANTOR: MINTER KADESH & PAMEL						
GRANTEE: CAMPBELL WALTER IV						
1051/1594	4/25/2002	WD	Q	V		48,000
GRANTOR: ALLISON LANDS INC						
GRANTEE: MINTER KADESH & PAM						

BUILDING NOTES

BUILDING DIMENSIONS

FGR=[YR=2016] W24 UST=[YR=2016] W8 S14 FST=[YR=2016] S7 UST=[YR=2016] S3 W18 S26 E16 N2 E14 N6 U6 R6 W10 N15 W8$ E8 N7 W8$ E8 N14$ S36 E24 N18 UST=[YR=2016] N5 W5 S5 E5$ W5 N5 E5 N13$ PTR= E40 BAS=[YR=2016] E32 S36 FOP=[YR=2016] S12 W14 STR=[YR=2016] S4 E14 S4 W20 N8 E6$ W6 N6 U6 R6 E14$ W14 D6 L6 S6 W14 S2 W16 N26 E18 N3 STR=[YR=2016] N7 E8 S7 W8$ FOP=[YR=2016] N13 W4 S13 E4$E8 N7 W8 N14$ W40$.

EXTRA FEATURES

LN	OB/XF CODE	DESCRIPTION	BLD	CAP	L	W	UNITS	UT	Adj R	ADJ UNIT PRICE	ORIG COND	YEAR ON	YEAR ACTUAL	Q	% COND	OB/XF MKT VALUE	NOTES
1	0812	CONCRETE C	0	100	0	0	968.00	SF	4.00	4.00	100	2016	2016	3	95	3,678	

LAND DESCRIPTION

TOTAL OB/XF 3,678

LN	USE CODE	CLS	LAND USE DESCRIPTION	CAP	RD	LOC ZONE	FRONT	DEPTH	TOT LND UTS	UNIT TYPE	DT	DPTH FACT	% COND	TOT ADJ	UNIT PRICE	ADJ UNIT PRICE	LAND VALUE	OTHER ADJUSTMENTS AND NOTES	YEAR	DENSITY	DECL	FRZ	YR	CONSRV
1	000134	C	RES POND	100		RSF-1	0.00	0.00	1.00	LT		1.00	1.00	1.00	125,000.00	125,000.00	125,000							

REVIEW DATE 05/12/2019 BY KBA Total Acres: 0.00 Total Land Value: 125,000 Market: 0 Agricultural: 0 Common: 125,000 PRINTED 07/30/2025 BY SYS