LOT 21
IN OR 2140/1836
OYSTER BAY #5 PB 6/12

STETTNER ROBERT LIVING TRUST/STETTNER ROBERT W TRU
96100 LIGHT WIND DRIVE
FERNANDINA BEACH, FL 32034

2025

46-3N-28-5484-0021-0000

NASSAU COUNTY PROPERTY

BUILDING CHARACTERISTICS

ELEMENT	CD	CONSTRUCTION
Exterior Wall	31	HARDIE BRD 100
Roof Structur	08	IRREGULAR 100
Roof Cover	03	COMP SHNGL 100
Interior Wall	05	DRYWALL 100
Interior Floo	12	HARDWOOD 60
Interior Floo	14	CARPET 40
Air Condition	03	CENTRAL 100
Heating Type	04	AIR DUCTED 100
Bedrooms		3 100
Bathrooms		2.5 100
Frame	02	WOOD FRAME 100
Stories	2.	2. 100
Units		0 100
Occupancy	00	NONE 100
Quality	04	Quality Level 04
DOR CODE	0100	SINGLE FAMILY
MAP NUM		MKT AREA 04
NEIGHBORHOOD/LOC	4024.00	

AREA TYPE	TOTAL GROSS AREA	PCT OF BASE	YEAR	TOT ADJ AREA	SUBAREA MARKET VALUE
BAS	1,556	100	1995	1,556	261,319
DCK	233	10	1995	23	3,863
FGR	528	55	1995	290	48,703
FOP	252	30	1995	76	12,764
FSP	112	40	1995	45	7,557
FSP	210	40	1995	84	14,107
FUS	588	100	1995	588	98,750
TOTALS	3,479			2,662	447,065

MARKET ADJUSTMENTS

TYPE	MDL	EFF. AREA	TOT ADJ PTS	EFF. BASE RATE	REPL. COST NEW	AYB	EYB	ECON	FNCT		NORM	% COND
0500	01	2,662	114.9120	181.56	483,313	1995	2008	0	0	0	7.50	92.50

1 SFR CUST – 100% - 2018 Heated Area: 2144 HX Base Yr 2018

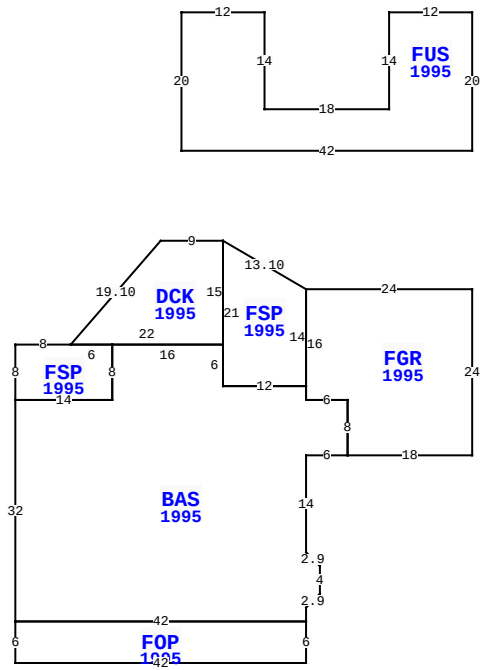

96100 LIGHT WIND DR, FERNANDINA BEACH

BLD DATE		LGL DATE	
XF DATE		LAND DATE	05/08/2025 MLU
INC DATE		AG DATE	

VALUATION SUMMARY

VALUATION BY		STANDARD
Tax Group: 4	Tax Dist:	
BUILDING MARKET VALUE		447,065
TOTAL MARKET OB/XF VALUE		7,070
TOTAL LAND VALUE - MARKET		142,500
TOTAL MARKET VALUE		596,635
SOH/AGL Deduction		237,345
ASSESSED VALUE		359,290
TOTAL EXEMPTION VALUE	HX HB WR	55,722
BASE TAXABLE VALUE		303,568
TOTAL JUST VALUE		596,635
NCON VALUE		0
INCOME VALUE		
PREVIOUS YEAR MKT VALUE		573,991

PERMIT NUM	DESCRIPTION	AMT	ISSUED
B2112502	(GARAGE DOOR)	2,195	09/17/2021
B2108644	H/AC	0	01/26/2021
B2000764	(2) WINDOWS	2,481	01/01/2020

SALES DATA

OFF RECORD Number	DATE	TYPE INST	Q U	V I	RSN CD	SALE PRICE
2140/1836	8/15/2017	WD	Q	I	01	415,000
GRANTOR: CRUIKSHANK KENNETH &						
GRANTEE: STETTNER ROBERT W L						
0881/1445	5/05/1999	WD	Q	I		236,000
GRANTOR: WILLIAMS DAVID J & CA						
GRANTEE: CRUIKSHANK KENNETH						

BUILDING NOTES

BUILDING DIMENSIONS

FGR=[YR=1995] W24 FSP=[YR=1995] U7 L12 DCK=[YR=1995] W9 L13 D15 FSP=[YR=1995] W8 S8 BAS=[YR=1995] S32 FOP=[YR=1995] S6 E42 N6 W42 $ E42 N2 R2 U2 N4 L2 U2 N14 E6 N8 W6 N2 W12 N6 W16 S8 W14$ E14 N8 W6$ E22 N15 $ S21 E12 N14$ S16 E6 S8 E18 N24$ PTR= N20 FUS=[YR=1995] N20 W12 S14 W18 N14 W12 S20 E42$ S20$.

EXTRA FEATURES

LN	OB/XF CODE	DESCRIPTION	BLD	CAP	L	W	UNITS	UT	Adj R	ADJ UNIT PRICE	ORIG COND	YEAR ON	YEAR ACTUAL	Q	% COND	OB/XF MKT VALUE	NOTES
1	0500	FP-PRE FAB	0	100	0	0	1.00	UT	3,500.00	3,500.00	100	1995	1995	3	76	2,660	
2	0825	BRICK	0	100	0	0	168.00	SF	12.50	12.50	100	1995	1995	3	90	1,890	
3	0810	CONCRETE A	0	100	0	0	456.00	SF	6.50	6.50	100	1995	1995	3	68	2,016	
4	1075	TRELLIS G	0	100	4	18	72.00	SF	35.00	35.00	100	1995	1995	3	20	504	

LAND DESCRIPTION

TOTAL OB/XF 7,070

LN	USE CODE	CLS	LAND USE DESCRIPTION	CAP	RD	LOC ZONE	FRONT	DEPTH	TOT LND UTS	UNIT TYPE	DT	DPTH FACT	% COND	TOT ADJ	UNIT PRICE	ADJ UNIT PRICE	LAND VALUE	OTHER ADJUSTMENTS AND NOTES	YEAR	DENSITY	DECL	FRZ	YR	CONSRV
1	000100	C	RES	100		PUD	0.00	0.00	1.00	LT		1.00	1.00	1.00	142,500.00	142,500.00	142,500							

REVIEW DATE 05/12/2019 BY KBA Total Acres: 0.00 Total Land Value: 142,500 Market: 0 Agricultural: 0 Common: 142,500 PRINTED 07/30/2025 BY SYS