LOT 6
OYSTER BAY #5 PB 6/12

LISKA DANIEL P & CYNTHIA S
96167 LIGHT WIND DRIVE
FERNANDINA BEACH, FL 32034-6162

2025

46-3N-28-5484-0006-0000

NASSAU COUNTY PROPERTY

BUILDING CHARACTERISTICS

ELEMENT	CD	CONSTRUCTION
Exterior Wall	31	HARDIE BRD 100
Roof Structur	08	IRREGULAR 100
Roof Cover	03	COMP SHNGL 100
Interior Wall	05	DRYWALL 100
Interior Floo	12	HARDWOOD 70
Interior Floo	11	CLAY TILE 30
Air Condition	03	CENTRAL 100
Heating Type	04	AIR DUCTED 100
Bedrooms		3 100
Bathrooms		2.5 100
Frame	02	WOOD FRAME 100
Stories	1.5	1.5 100
Units		0 100
Occupancy	00	NONE 100
Quality	04	Quality Level 04
DOR CODE	0100	SINGLE FAMILY
MAP NUM		MKT AREA 04
NEIGHBORHOOD/LOC	4024.00	

AREA TYPE	TOTAL GROSS AREA	PCT OF BASE	YEAR	TOT ADJ AREA	SUBAREA MARKET VALUE
BAS	2,163	100	2012	2,163	459,774
FGR	523	55	2012	288	61,218
FOP	54	30	2012	16	3,401
FOP	160	30	2012	48	10,203
FSP	224	40	2012	90	19,131
FUS	767	100	2012	767	163,036
PTO	222	5	2021	11	2,339
STR	99	10	2021	10	2,125
TOTALS	4,212			3,393	721,227

MARKET ADJUSTMENTS

TYPE	MDL	EFF. AREA	TOT ADJ PTS	EFF. BASE RATE	REPL. COST NEW	AYB	EYB	ECON	FNCT		NORM	% COND
0500	11	3,393	140.1418	221.42	751,278	2012	2015	0	0	0	4.00	96.00

1 SFR CUST – 100% - 2022 Heated Area: 2930 HX Base Yr 2022

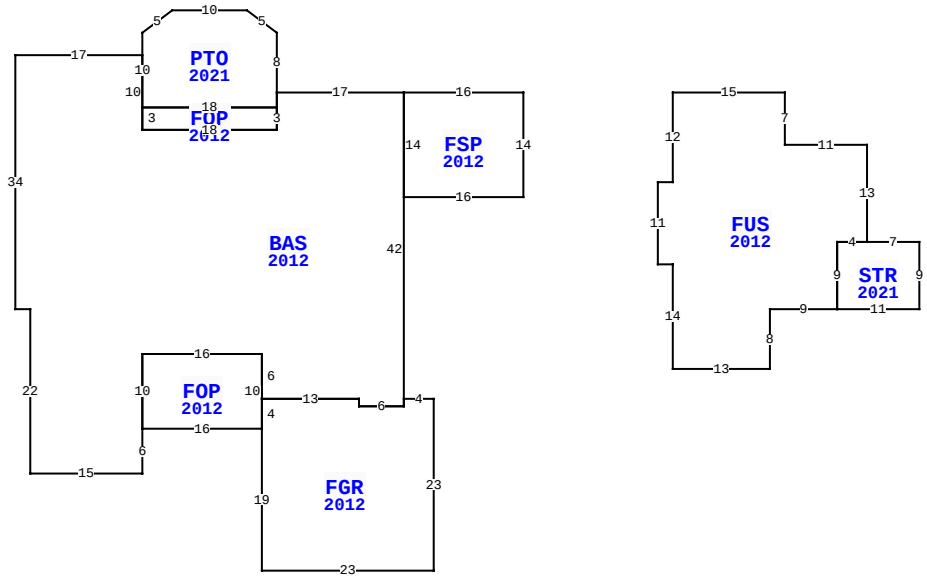

BLD DATE		LGL DATE	
XF DATE		LAND DATE	05/08/2025 MLU
INC DATE		AG DATE	

96167 LIGHT WIND DR, FERNANDINA BEACH

NASSAU COUNTY PROPERTY — VALUATION SUMMARY

VALUATION BY		STANDARD
Tax Group: 4	Tax Dist:	
BUILDING MARKET VALUE		721,227
TOTAL MARKET OB/XF VALUE		14,757
TOTAL LAND VALUE - MARKET		142,500
TOTAL MARKET VALUE		878,484
SOH/AGL Deduction		255,748
ASSESSED VALUE		622,736
TOTAL EXEMPTION VALUE	HX HB	50,722
BASE TAXABLE VALUE		572,014
TOTAL JUST VALUE		878,484
NCON VALUE		0
INCOME VALUE		
PREVIOUS YEAR MKT VALUE		843,196

PERMIT NUM	DESCRIPTION	AMT	ISSUED
B240010342	COMP ROOF SCREEN	5,513	09/09/2024
B25211	CO ISSUED	0	07/05/2012
E24508	NEW CONSTR	0	01/01/2012
E24494	NEW CONSTR	0	01/01/2012
M16702	H/AC	0	11/01/2011
P15036	NEW CONSTR	0	10/01/2011

SALES DATA

OFF RECORD Number	DATE	TYPE INST	Q / U	V / I	RSN CD	SALE PRICE
2504/1617	10/13/2021	WD	Q	I	01	870,000
GRANTOR: CACCIOLA DOMINICK & J						
GRANTEE: LISKA DANIEL P & CY						
1727/0240	2/28/2011	WD	U	V	11	39,000
GRANTOR: SYNOVUS BANK						
GRANTEE: CACCIOLA DOMINICK &						

BUILDING NOTES

BUILDING DIMENSIONS

FSP=[YR=2012] W16 BAS=[YR=2012] W17 PTO=[YR=2021] N8 U3 L4 W10 L4 D3 S10 E18 N2$ S2 FOP=[YR=2012] W18 S3 E18 N3 $ S3 W18 N10 W17 S34 E2 S22 E15 N6 FOP=[YR=2012] E16 FGR=[YR=2012] S19 E23 N23 W4 S1 W6 N1 W13 S4$ N10 W16 S10 $ N10 E16 S6 E13 S1 E6 N42 $ S14 E16 N14 $PTR= E20 FUS=[YR=2012] E15 S7 E11 S13 STR=[YR=2021] E7 S9 W11 N9 E4$ W4 S9 W9 S8 W13 N14 W2 N11 E2 N12$W20 $.

EXTRA FEATURES

L N	OB/XF CODE	DESCRIPTION	BLD	CAP	L	W	UNITS	UT	Adj R	ADJ UNIT PRICE	ORIG COND	YEAR ON	YEAR ACTUAL	Q	% COND	OB/XF MKT VALUE	NOTES
1	0855	CONC PAVER	0	100	0	0	1,604.00	SF	10.00	10.00	100	2012	2012	3	92	14,757	

LAND DESCRIPTION

TOTAL OB/XF 14,757

L N	USE CODE	CLS	LAND USE DESCRIPTION	CAP	R D	LOC ZONE	FRONT	DEPTH	TOT LND UTS	UNIT TYPE	D T	DPTH FACT	% COND	TOT ADJ	UNIT PRICE	ADJ UNIT PRICE	LAND VALUE	OTHER ADJUSTMENTS AND NOTES	YEAR	DENSITY	DECL	FRZ	YR	CONSRV
1	000134	C	RES POND	100		PUD	0.00	0.00	1.00	LT		1.00	1.00	1.00	142,500.00	142,500.00	142,500							

REVIEW DATE 02/28/2025 BY NW Total Acres: 0.00 Total Land Value: 142,500 Market: 0 Agricultural: 0 Common: 142,500 PRINTED 07/30/2025 BY SYS