LOT 5
IN OR 1513/237
OYSTER BAY #5 PB 6/12

STEPHENS DEBRA L
96175 LIGHT WIND DR
FERNANDINA BEACH, FL 32034

2025

46-3N-28-5484-0005-0000

NASSAU COUNTY PROPERTY

BUILDING CHARACTERISTICS

ELEMENT	CD	CONSTRUCTION
Exterior Wall	31	HARDIE BRD 80
Exterior Wall	12	CEDAR 20
Roof Structur	03	GABLE/HIP 100
Roof Cover	03	COMP SHNGL 100
Interior Wall	05	DRYWALL 100
Interior Floo	14	CARPET 80
Interior Floo	11	CLAY TILE 20
Air Condition	03	CENTRAL 100
Heating Type	04	AIR DUCTED 100
Bedrooms		3 100
Bathrooms		2.5 100
Frame	02	WOOD FRAME 100
Stories	2.	2. 100
Units		0 100
Occupancy	00	NONE 100
Quality	04	Quality Level 04
DOR CODE	0100	SINGLE FAMILY
MAP NUM		MKT AREA 04
NEIGHBORHOOD/LOC	4024.00	

AREA TYPE	TOTAL GROSS AREA	PCT OF BASE	YEAR	TOT ADJ AREA	SUBAREA MARKET VALUE
BAL	178	15	2001	27	4,119
BAS	1,450	100	2001	1,450	221,208
FGR	420	55	2001	231	35,241
FOP	210	30	2001	63	9,611
FSP	170	40	2001	68	10,374
FUS	1,198	100	2001	1,198	182,764
TOTALS	3,626			3,037	463,316

MARKET ADJUSTMENTS

TYPE	MDL	EFF. AREA	TOT ADJ PTS	EFF. BASE RATE	REPL. COST NEW	AYB	EYB	ECON	FNCT		NORM	% COND
0500	01	3,037	106.4532	168.20	510,823	2001	2005	0	0	0	9.30	90.70

1 SFR CUST – 100% - 2008 Heated Area: 2648 HX Base Yr 2008

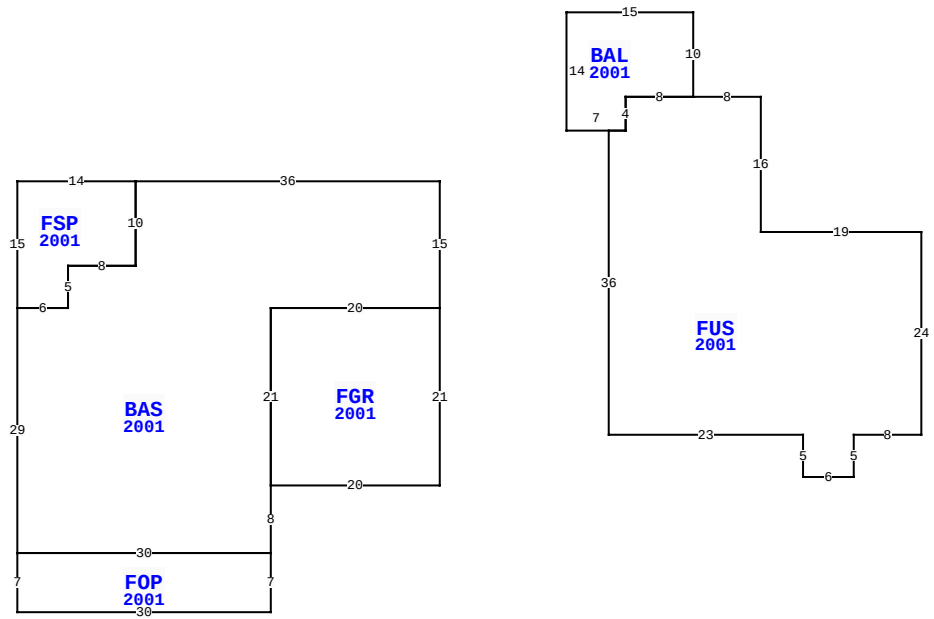

96175 LIGHT WIND DR, FERNANDINA BEACH

BLD DATE		LGL DATE	
XF DATE		LAND DATE	05/08/2025 MLU
INC DATE		AG DATE	

VALUATION SUMMARY

VALUATION BY		STANDARD
Tax Group: 4	Tax Dist:	
BUILDING MARKET VALUE		463,316
TOTAL MARKET OB/XF VALUE		16,289
TOTAL LAND VALUE - MARKET		142,500
TOTAL MARKET VALUE		622,105
SOH/AGL Deduction		301,844
ASSESSED VALUE		320,261
TOTAL EXEMPTION VALUE	HX HB	50,722
BASE TAXABLE VALUE		269,539
TOTAL JUST VALUE		622,105
NCON VALUE		0
INCOME VALUE		
PREVIOUS YEAR MKT VALUE		599,973

PERMIT NUM	DESCRIPTION	AMT	ISSUED
007034	NEW CONSTR	120,000	04/01/2000
962875	TEMP POLE	0	07/01/1996

SALES DATA

OFF RECORD Number	DATE	TYPE INST	Q U /	V I /	RSN CD	SALE PRICE
1513/0237	7/18/2007	WD	Q	I		410,000
GRANTOR: BELL RANDALL A & C AN						
GRANTEE: STEPHENS DEBRA L						
0976/0770	3/16/2001	WD	Q	I		230,000
GRANTOR: AMELIA DEVELOPMENT CO						
GRANTEE: BELL RANDALL A & C						

BUILDING NOTES

BUILDING DIMENSIONS

BAS=[YR=2001] W36 FSP=[YR=2001] W14 S15 E6 N5 E8 N10$ S10 W8 S5 W6 S29 FOP=[YR=2001] S7 E30 N7 W30$ E30 N8 FGR=[YR=2001] E20 N21 W20 S21 $ N21 E20 N15 $ PTR= E15 N20 BAL=[YR=2001] E15 S10 FUS=[YR=2001] E8 S16 E19 S24W8 S5 W6 N5 W23 N36 E2 N4 E8$ W8S4 W7 N14$ S20 W15 $.

EXTRA FEATURES

LN	OB/XF CODE	DESCRIPTION	BLD	CAP	L	W	UNITS	UT	Adj R	ADJ UNIT PRICE	ORIG COND	YEAR ON	YEAR ACTUAL	Q	% COND	OB/XF MKT VALUE	NOTES
1	0812	CONCRETE C	0	100	0	0	1,641.00	SF	4.00	4.00	100	2001	2001	3	79	5,186	
2	0500	FP-PRE FAB	0	100	0	0	1.00	UT	3,500.00	3,500.00	100	2001	2001	3	84	2,940	
3	0855	CONC PAVER	0	100	0	0	476.00	SF	10.00	10.00	100	2003	2003	3	82	3,903	
4	0462	ST/AL FNC	0	100	180	0	720.00	SF	10.00	10.00	100	2010	2010	3	56	4,032	
5	0463	FENCE GATE	0	100	0	0	1.00	UT	300.00	300.00	100	2010	2010	3	76	228	

LAND DESCRIPTION

TOTAL OB/XF 16,289

LN	USE CODE	CLS	LAND USE DESCRIPTION	CAP	RD	LOC ZONE	FRONT	DEPTH	TOT LND UTS	UNIT TYPE	DT	DPTH FACT	% COND	TOT ADJ	UNIT PRICE	ADJ UNIT PRICE	LAND VALUE	OTHER ADJUSTMENTS AND NOTES	YEAR	DENSITY	DECL	FRZ	YR	CONSRV
1	000134	C	RES POND	100	0003	PUD	0.00	0.00	1.00	LT		1.00	1.00	1.00	142,500.00	142,500.00	142,500							

REVIEW DATE 05/12/2019 BY KBA Total Acres: 0.00 Total Land Value: 142,500 Market: 0 Agricultural: 0 Common: 142,500 PRINTED 07/30/2025 BY SYS