LOT 26
OYSTER BAY #4 PB 6/24

HADDEMAN LUZIVETTE
96232 BAY VIEW DR
FERNANDINA BEACH, FL 32034

2025

46-3N-28-5483-0026-0000

NASSAU COUNTY PROPERTY

BUILDING CHARACTERISTICS

ELEMENT	CD	CONSTRUCTION
Exterior Wall	10	ABOVE AVG 100
Roof Structur	08	IRREGULAR 100
Roof Cover	13	STAND SEAM 100
Interior Wall	05	DRYWALL 70
Interior Wall	08	DECORATIVE 30
Interior Floo	12	HARDWOOD 80
Interior Floo	19	MARBLE 20
Air Condition	03	CENTRAL 100
Heating Type	04	AIR DUCTED 100
Bedrooms		5 100
Bathrooms		3.5 100
Frame	02	WOOD FRAME 100
Stories	2.5	2.5 100
Units		0 100
Quality	04	Quality Level 04
DOR CODE	0100	SINGLE FAMILY
MAP NUM		MKT AREA 04
NEIGHBORHOOD/LOC	4024.00	

AREA TYPE	TOTAL GROSS AREA	PCT OF BASE	YEAR	TOT ADJ AREA	SUBAREA MARKET VALUE
BAS	2,101	100	2006	2,101	507,158
FGR	840	55	2006	462	111,522
FOP	69	30	2006	21	5,070
FOP	104	30	2006	31	7,483
FOP	126	30	2006	38	9,172
FOP	206	30	2006	62	14,967
FOP	375	30	2006	112	27,036
FSP	180	40	2006	72	17,380
FUS	169	100	2006	169	40,795
FUS	540	100	2006	540	130,350
TOTALS	6,372			5,188	1,252,326

MARKET ADJUSTMENTS

TYPE	MDL	EFF. AREA	TOT ADJ PTS	EFF. BASE RATE	REPL. COST NEW	AYB	EYB	ECON	FNCT		NORM	% COND
0500	11	5,188	163.3962	258.17	1,339,386	2006	2010	0	0	0	6.50	93.50

1 SFR CUST – 100% - 2020 Heated Area: 4381 HX Base Yr 2020

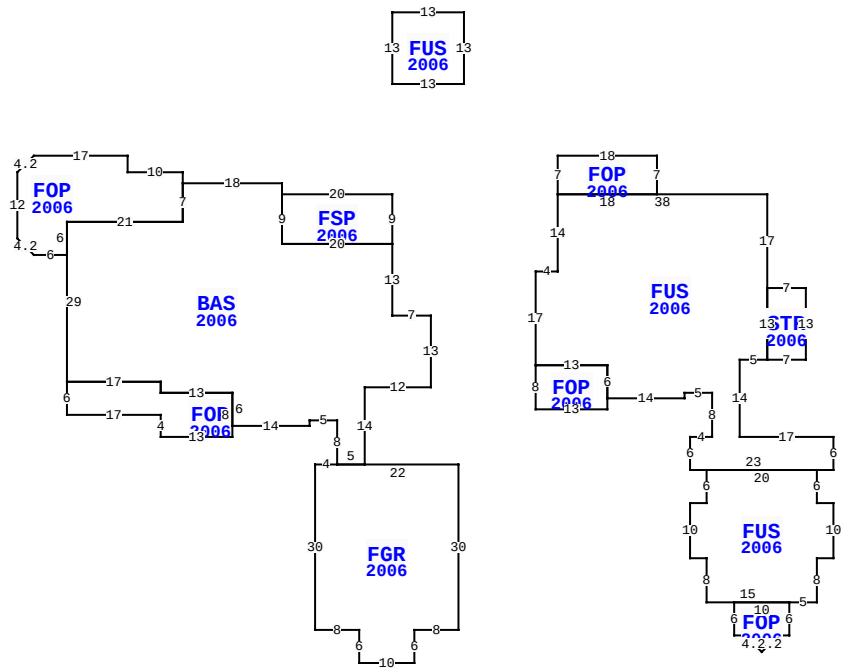

** This building has 12 Sub-Areas

96232 BAY VIEW DR, FERNANDINA BEACH

BLD DATE		LGL DATE	
XF DATE		LAND DATE	05/08/2025 MLU
INC DATE		AG DATE	

VALUATION SUMMARY

VALUATION BY		STANDARD
Tax Group: 4	Tax Dist:	
BUILDING MARKET VALUE		1,252,326
TOTAL MARKET OB/XF VALUE		17,231
TOTAL LAND VALUE - MARKET		142,500
TOTAL MARKET VALUE		1,412,057
SOH/AGL Deduction		542,542
ASSESSED VALUE		869,515
TOTAL EXEMPTION VALUE	HX HB WX	55,722
BASE TAXABLE VALUE		813,793
TOTAL JUST VALUE		1,412,057
NCON VALUE		0
INCOME VALUE		
PREVIOUS YEAR MKT VALUE		1,353,429

PERMIT NUM	DESCRIPTION	AMT	ISSUED
M2004228	H/AC	6,996	06/01/2020
M0509813	H/AC	0	05/01/2005
C0413863	CO ISSUED	0	12/01/2004
B0413863	NEW CONSTR	0	12/01/2004
P0408740	OTHER	0	12/01/2004

SALES DATA

OFF RECORD Number	DATE	TYPE INST	Q / U	V / I	RSN CD	SALE PRICE
2327/0040	12/20/2019	WD	Q	I	01	935,000
GRANTOR: KLYKKEN ROBIN D						
GRANTEE: HADDEMAN LUZIVETTE						
1911/0213	3/21/2014	WD	Q	I	01	472,000
GRANTOR: KIROUAC SHAWN L & ELI						
GRANTEE: KLYKKEN PER G & ROB						

BUILDING NOTES

EXTRA FEATURES

LN	OB/XF CODE	DESCRIPTION	BLD	CAP	L	W	UNITS	UT	Adj R	ADJ UNIT PRICE	ORIG COND	YEAR ON	YEAR ACTUAL	Q	% COND	OB/XF MKT VALUE	NOTES
1	0812	CONCRETE C	0	100	0	0	1,836.00	SF	4.00	4.00	100	2006	2006	3	86	6,316	
2	0462	ST/AL FNC	0	100	300	0	1,200.00	SF	10.00	10.00	100	2006	2006	3	40	4,800	
3	0500	FP-PRE FAB	0	100	0	0	1.00	UT	3,500.00	3,500.00	100	2006	2006	3	89	3,115	
4	0600	SUMMER KIT	0	100	0	0	1.00	UT	12,500.00	12,500.00	100	2006	2006	3	24	3,000	

BUILDING DIMENSIONS

FSP=[YR=2006] W20 BAS=[YR=2006] N2 W18 FOP=[YR=2006] N2 W10 N3 W17 L3 D3 S12 R3 D3 E6 N6 E21 N7$ S7 W21 S29 FOP=[YR=2006] S6 E17 S4 E13 N8 W13 N2 W17$ E17 S2 E13 S6 E14 N1 E5 S8 FGR=[YR=2006] W4 S30 E8 S6 E10 N6 E8 N30 W22$ E5 N14 E12 N13 W7 N13 W20 N9$ S9 E20 N9$ PTR= E30 FOP=[YR=2006] N7 E18 S7 W18$ FUS=[YR=2006] E38 S17 STR=[YR=2006] E7 S13 W7 N13$ S13 W5 S14 E17 S6 W3 FUS=[YR=2006] S6 E3 S10 W3 S8 W5 FOP=[YR=2006] S6 W2 D3 L3 L3 U3 W2 N6 E10$ W15 N8 W3 N10 E3 N6 E20$ W23 N6 E4 N8 W5 S1 W14 FOP=[YR=2006] S2 W13 N8 E13 S6$N6 W13 N17 E4 N14$ W30$ PTR= N20 FUS2006 = N13 E13 S13 W13$S20$.

LAND DESCRIPTION

TOTAL OB/XF 17,231

LN	USE CODE	CLS	LAND USE DESCRIPTION	CAP	RD	LOC ZONE	FRONT	DEPTH	TOT LND UTS	UNIT TYPE	DT	DPTH FACT	% COND	TOT ADJ	UNIT PRICE	ADJ UNIT PRICE	LAND VALUE	OTHER ADJUSTMENTS AND NOTES	YEAR	DENSITY	DECL	FRZ	YR	CONSRV
1	000134	C	RES POND	100		PUD	0.00	0.00	1.00	LT		1.00	1.00	1.00	142,500.00	142,500.00	142,500							

REVIEW DATE 04/16/2020 BY KWA Total Acres: 0.00 Total Land Value: 142,500 Market: 0 Agricultural: 0 Common: 142,500 PRINTED 07/30/2025 BY SYS