LOT 22
IN OR 1959/1246
OYSTER BAY #4 PB 6/24

HUNTER DOUGLAS R III & DEBRA J
96300 BAY VIEW DRIVE
FERNANDINA BEACH, FL 32034

2025

46-3N-28-5483-0022-0000

BUILDING CHARACTERISTICS

ELEMENT	CD	CONSTRUCTION
Exterior Wall	10	ABOVE AVG 100
Roof Structur	08	IRREGULAR 100
Roof Cover	13	STAND SEAM 100
Interior Wall	05	DRYWALL 80
Interior Wall	08	DECORATIVE 20
Interior Floo	12	HARDWOOD 100
Air Condition	03	CENTRAL 100
Heating Type	04	AIR DUCTED 100
Bedrooms		4 100
Bathrooms		4 100
Frame	02	WOOD FRAME 100
Stories	2.5	2.5 100
Units		0 100
Quality	04	Quality Level 04
DOR CODE	0100	SINGLE FAMILY
MAP NUM		MKT AREA 04
NEIGHBORHOOD/LOC	4024.00	

AREA TYPE	TOTAL GROSS AREA	PCT OF BASE	YEAR	TOT ADJ AREA	SUBAREA MARKET VALUE
BAS	1,860	100	2019	1,860	447,826
FGR	720	55	2019	396	95,343
FOP	64	30	2019	19	4,575
FOP	112	30	2019	34	8,186
FOP	390	30	2019	117	28,170
FOP	390	30	2019	117	28,170
FSP	390	40	2019	156	37,559
FUS	1,430	100	2019	1,430	344,296
FUS	650	100	2020	650	156,498
SFB	354	80	2019	283	68,136
TOTALS	6,496			5,076	1,222,131

MARKET ADJUSTMENTS

TYPE	MDL	EFF. AREA	TOT ADJ PTS	EFF. BASE RATE	REPL. COST NEW	AYB	EYB	ECON	FNCT		NORM	% COND
0500	11	5,076	155.4960	245.68	1,247,072	2019	2019	0	0	0	2.00	98.00

1 SFR CUST - 100% - 2020 Heated Area: 4223 HX Base Yr 2020

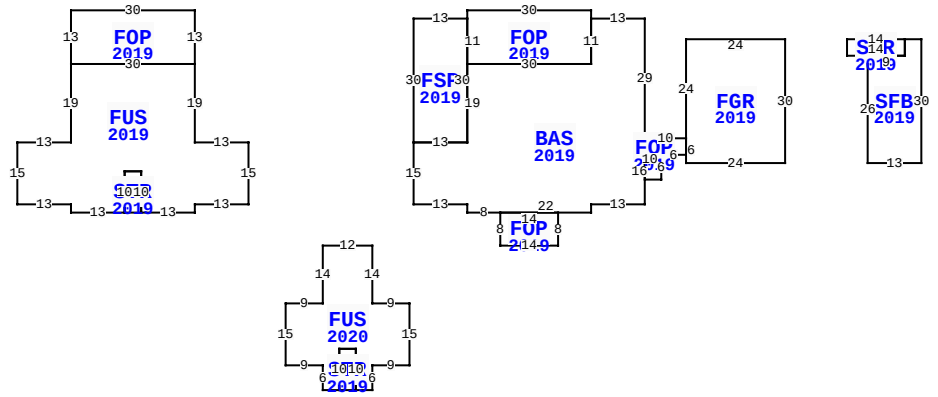

** This building has 13 Sub-Areas

96300 BAY VIEW DR, FERNANDINA BEACH

BLD DATE		LGL DATE	
XF DATE		LAND DATE	05/08/2025 MLU
INC DATE		AG DATE	

NASSAU COUNTY PROPERTY

PAGE 1 of 1 4

VALUATION SUMMARY

VALUATION BY		STANDARD
Tax Group: 4	Tax Dist:	
BUILDING MARKET VALUE		1,222,131
TOTAL MARKET OB/XF VALUE		37,613
TOTAL LAND VALUE - MARKET		142,500
TOTAL MARKET VALUE		1,402,244
SOH/AGL Deduction		633,619
ASSESSED VALUE		768,625
TOTAL EXEMPTION VALUE	HX HB	50,722
BASE TAXABLE VALUE		717,903
TOTAL JUST VALUE		1,402,244
NCON VALUE		0
INCOME VALUE		
PREVIOUS YEAR MKT VALUE		1,343,800

PERMIT NUM	DESCRIPTION	AMT	ISSUED
C1631662	CO ISSUED	0	04/04/2019
B1631662	NEW CONSTR	522,501	01/01/2016

SALES DATA

OFF RECORD Number	DATE	TYPE INST	Q / U	V / I	RSN CD	SALE PRICE
1959/1246	1/26/2015	WD	Q	V	01	85,000
GRANTOR: JONES BOBBY DENTON &						
GRANTEE: HUNTER DOUGLAS R II						
1674/0135	4/28/2010	WD	Q	V	01	142,500
GRANTOR: PARRETT DANNY L						
GRANTEE: JONES BOBBY D & PAM						

BUILDING NOTES

BUILDING DIMENSIONS

FGR=[YR=2019] W24 S24 FOP=[YR=2019] W10 BAS=[YR=2019] N29 W13 FOP=[YR=2019] N2 W30 S2 FSP=[YR=2019] W13 S30 E13 N30$ S11 E30 N11$ S11 W30 S19 W13 S15 E13 S2 E8 FOP=[YR=2019] S8 E14 N8 W14$ E22 N2 E13 N16$ S10 E4 N6 E6 N4$ S6 E24 N30$ PTR= W130 S25 FUS=[YR=2019] W13 N19 FOP=[YR=2019] N13 W30 S13 E30$ W30 S19 W13 S15 E13 S2 E13 STR=[YR=2019] E4 N10 W4 S10$ N10 E4 S10 E13 N2 E13 N15$ N25 E130$ PTR= W100 S50 FUS=[YR=2020] W12 S14 W9 S15 E9 S6 E4 STR=[YR=2019] E4 N10 W4 S10$ N10 E4 S10 E4 N6 E9 N15 W9 N14$ N50 E100$ PTR= E15 STR=[YR=2019] E14 SFB=[YR=2019] E4 S30 W13 N26 E9 N4$ S4 W14 N4$ W15$.

EXTRA FEATURES

LN	OB/XF CODE	DESCRIPTION	BLD	CAP	L	W	UNITS	UT	Adj R	ADJ UNIT PRICE	ORIG COND	YEAR ON	YEAR ACTUAL	Q	% COND	OB/XF MKT VALUE	NOTES
1	0504	FP-ELECTRI	0	100	0	0	1.00	UT	2,000.00	2,000.00	100	2019	2019	3	98	1,960	
2	0825	BRICK	0	100	50	3	150.00	SF	12.50	12.50	100	2019	2019	3	99	1,856	
3	0825	BRICK	0	100	0	0	1,996.00	SF	12.50	12.50	100	2019	2019	3	99	24,701	
4	0825	BRICK	0	100	0	0	735.00	SF	12.50	12.50	100	2019	2019	3	99	9,096	

LAND DESCRIPTION

TOTAL OB/XF 37,613

LN	USE CODE	CLS	LAND USE DESCRIPTION	CAP	RD	LOC ZONE	FRONT	DEPTH	TOT LND UTS	UNIT TYPE	DT	DPTH FACT	% COND	TOT ADJ	UNIT PRICE	ADJ UNIT PRICE	LAND VALUE	OTHER ADJUSTMENTS AND NOTES	YEAR	DENSITY	DECL	FRZ	YR	CONSRV
1	000134	C	RES POND	100		PUD	0.00	0.00	1.00	LT		1.00	1.00	1.00	142,500.00	142,500.00	142,500							

REVIEW DATE 03/04/2024 BY NWA Total Acres: 0.00 Total Land Value: 142,500 Market: 0 Agricultural: 0 Common: 142,500 PRINTED 07/30/2025 BY SYS