LOT B-40
VILLAS AT OYSTER BAY HARBOURS
PBK 8/229

NEW ATLANTIC BUILDERS INC
5875 MINING TER STE 205
JACKSONVILLE, FL 32257

2025

46-3N-28-5481-0B40-0000

BUILDING CHARACTERISTICS

ELEMENT	CD	CONSTRUCTION
Exterior Wall	31	HARDIE BRD 67
Exterior Wall	17	CB STUCCO 33
Roof Structur	03	GABLE/HIP 100
Roof Cover	14	STAND SEAM 100
Interior Wall	05	DRYWALL 100
Interior Floo	12	HARDWOOD 50
Interior Floo	14	CARPET 50
Air Condition	03	CENTRAL 100
Heating Type	04	AIR DUCTED 100
Bedrooms		4 100
Bathrooms		3.5 100
Frame	02	WOOD FRAME 67
Frame	03	MASONRY 33
Stories	3.	3. 100
Units		0 100
Occupancy	00	NONE 100
Quality	04	Quality Level 04
DOR CODE	0100	SINGLE FAMILY
MAP NUM		MKT AREA 04
NEIGHBORHOOD/LOC	4024.100	

AREA TYPE	TOTAL GROSS AREA	PCT OF BASE	YEAR	TOT ADJ AREA	SUBAREA MARKET VALUE
BAS	176	100	2025	176	36,867
FGR	862	55	2025	474	99,289
FOP	132	30	2025	40	8,379
FOP	194	30	2025	58	12,149
FOP	320	30	2025	96	20,109
FSP	150	40	2025	60	12,568
FUS	1,044	100	2025	1,044	218,687
FUS	1,256	100	2025	1,256	263,094
STR	43	10	2025	4	838
STR	68	10	2025	7	1,466
TOTALS	4,245			3,215	673,446

MARKET ADJUSTMENTS

TYPE	MDL	EFF. AREA	TOT ADJ PTS	EFF. BASE RATE	REPL. COST NEW	AYB	EYB	ECON	FNCT		NORM	% COND
0500	11	3,215	132.5760	209.47	673,446	2024	2024	0	0	0	0.00	100.00

1 SFR CUST – 0% - 2025 Heated Area: 2476 HX Base Yr

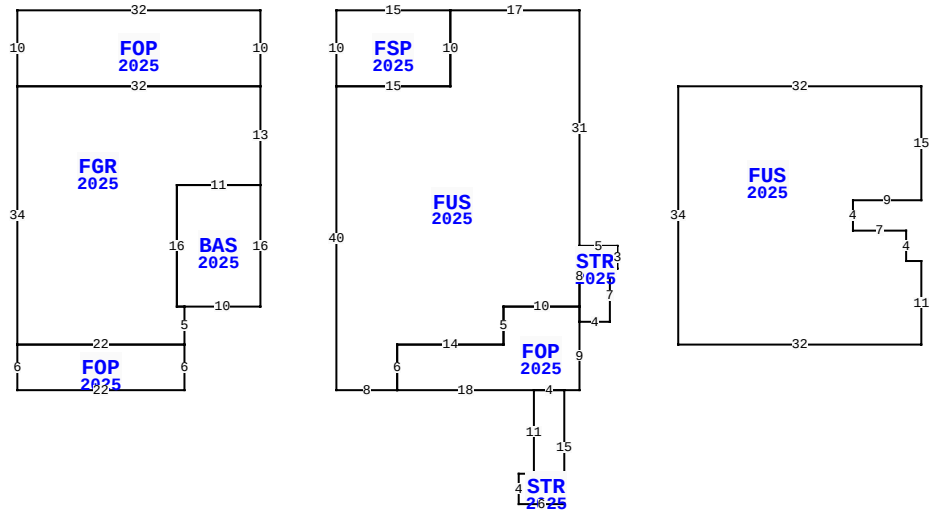

96561 BAY VIEW DR, FERNANDINA BEACH

BLD DATE		LGL DATE	
XF DATE		LAND DATE	05/07/2025 MLU
INC DATE		AG DATE	

NASSAU COUNTY PROPERTY

PAGE 1 of 1 4

VALUATION SUMMARY

VALUATION BY	STANDARD
Tax Group: 4	Tax Dist:
BUILDING MARKET VALUE	673,446
TOTAL MARKET OB/XF VALUE	20,040
TOTAL LAND VALUE - MARKET	120,000
TOTAL MARKET VALUE	813,486
SOH/AGL Deduction	0
ASSESSED VALUE	813,486
TOTAL EXEMPTION VALUE	0
BASE TAXABLE VALUE	813,486
TOTAL JUST VALUE	813,486
NCON VALUE	693,486
INCOME VALUE	
PREVIOUS YEAR MKT VALUE	160,000

PERMIT NUM	DESCRIPTION	AMT	ISSUED
CO250000147	NEW SFR MODEL HOM	499,132	01/07/2025
22017048	NEW CONSTR	499,132	11/16/2022

SALES DATA

OFF RECORD Number	DATE	TYPE INST	Q / U	V / I	RSN CD	SALE PRICE
2477/0107	6/30/2021	SW	Q	V	01	115,000

GRANTOR: O B ISLAND HOMES LLC
GRANTEE: NEW ATLANTIC BUILDE

BUILDING NOTES

EXTRA FEATURES

LN	OB/XF CODE	DESCRIPTION	BLD	CAP	L	W	UNITS	UT	Adj R	ADJ UNIT PRICE	ORIG COND	YEAR ON	YEAR ACTUAL	Q	% COND	OB/XF MKT VALUE	NOTES
1	0855	CONC PAVER	0	0	0	0	984.00	SF	10.00	10.00	100	2025	2024		100	9,840	
2	0409	ELEVATOR R	0	0	0	0	1.00	UT	10,200.00	10,200.00	100	2025	2024		100	10,200	

BUILDING DIMENSIONS

FGR=[YR=2025;ORIG=-50,0] W32 S34 E22 N5 W1 N16 E11 N13 $
BAS=[YR=2025;ORIG=-61,13] E11 S16 W10 W1 N16 $
FOP=[YR=2025;ORIG=-82,34] E22 S6 W22 N6 $
FOP=[YR=2025;ORIG=-82,-10] E32 S10 W32 N10 $
FUS=[YR=2025;ORIG=-40,0] E15 N10 E17 S31 S8 W10 S5 W14 S6 W8 N40 $
FSP=[YR=2025;ORIG=-40,-10] E15 S10 W15 N10 $
STR=[YR=2025;ORIG=-8,21] E5 S3 W1 S7 W4 N2 N8 $
FOP=[YR=2025;ORIG=-32,34] E14 N5 E10 S2 S9 W2 W4 W18 N6 $
STR=[YR=2025;ORIG=-14,40] E4 S15 W6 N4 E2 N11 $
FUS=[YR=2025;ORIG=5,0] E32 S15 W9 S4 E7 S4 E2 S11 W32 N34 $
.

LAND DESCRIPTION

TOTAL OB/XF 20,040

LN	USE CODE	CLS	LAND USE DESCRIPTION	CAP	RD	LOC ZONE	FRONT	DEPTH	TOT LND UTS	UNIT TYPE	DT	DPTH FACT	% COND	TOT ADJ	UNIT PRICE	ADJ UNIT PRICE	LAND VALUE	OTHER ADJUSTMENTS AND NOTES	YEAR	DENSITY	DECL	FRZ	YR	CONSRV
1	000116	C	RES MARSH	0		PUD	0.00	0.00	1.00	LT		1.00	1.00	1.00	120,000.00	120,000.00	120,000							

REVIEW DATE 09/16/2024 BY DJ Total Acres: 0.00 Total Land Value: 120,000 Market: 0 Agricultural: 0 Common: 120,000 PRINTED 07/30/2025 BY SYS