LOT B-37
VILLAS AT OYSTER BAY HARBOURS
PBK 8/229

MILLER GARY JAY & MELANIE RENEE
96558 COMPASS POINT DR
FERNANDINA BEACH, FL 32034

2025

46-3N-28-5481-0B37-0000

BUILDING CHARACTERISTICS

ELEMENT	CD	CONSTRUCTION
Exterior Wall	31	HARDIE BRD 66
Exterior Wall	17	CB STUCCO 34
Roof Structur	08	IRREGULAR 100
Roof Cover	13	STAND SEAM 100
Interior Wall	05	DRYWALL 100
Interior Floo	11	CLAY TILE 50
Interior Floo	13	LVT/LAMNT 50
Air Condition	03	CENTRAL 100
Heating Type	04	AIR DUCTED 100
Bedrooms		3 100
Bathrooms		2.5 100
Frame	02	WOOD FRAME 100
Stories	1.	1. 100
Units		1 100
Quality	03	Quality Level 03
DOR CODE	0100	SINGLE FAMILY
MAP NUM		MKT AREA 04
NEIGHBORHOOD/LOC	4024.100	

AREA TYPE	TOTAL GROSS AREA	PCT OF BASE	YEAR	TOT ADJ AREA	SUBAREA MARKET VALUE
BAS	105	100	2025	105	23,733
FGR	911	55	2025	501	113,241
FOP	55	30	2025	16	3,616
FOP	90	30	2025	27	6,103
FOP	166	30	2025	50	11,302
FOP	438	30	2025	131	29,610
FST	21	55	2025	12	2,712
FST	55	55	2025	30	6,781
FUS	1,345	100	2025	1,345	304,010
FUS	1,362	100	2025	1,362	307,853
TOTALS	4,791			3,628	820,037

MARKET ADJUSTMENTS

TYPE	MDL	EFF. AREA	TOT ADJ PTS	EFF. BASE RATE	REPL. COST NEW	AYB	EYB	ECON	FNCT		NORM	% COND
0500	11	3,628	143.0579	226.03	820,037	2024	2024	0	0	0	0.00	100.00

1 SFR CUST – 100% - 2025 Heated Area: 2812 HX Base Yr 2025

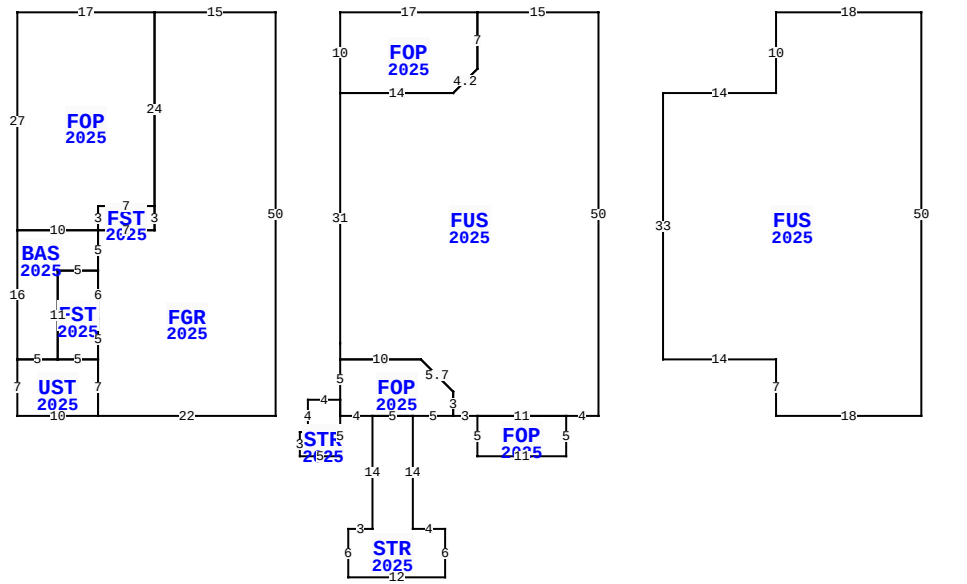

** This building has 13 Sub-Areas

96558 COMPASS POINT DR, FERNANDINA BEACH

BLD DATE		LGL DATE	
XF DATE		LAND DATE	05/07/2025 MLU
INC DATE		AG DATE	

NASSAU COUNTY PROPERTY

PAGE 1 of 1 4

VALUATION SUMMARY

VALUATION BY		STANDARD
Tax Group: 4	Tax Dist:	
BUILDING MARKET VALUE		820,037
TOTAL MARKET OB/XF VALUE		6,660
TOTAL LAND VALUE - MARKET		120,000
TOTAL MARKET VALUE		946,697
SOH/AGL Deduction		317,712
ASSESSED VALUE		628,985
TOTAL EXEMPTION VALUE	HX HB	50,722
BASE TAXABLE VALUE		578,263
TOTAL JUST VALUE		946,697
NCON VALUE		826,697
INCOME VALUE		
PREVIOUS YEAR MKT VALUE		160,000

PERMIT NUM	DESCRIPTION	AMT	ISSUED
CO240013784	PRIVATE PROVIDER	546,870	12/12/2024
B240001107	HTD 2805	546,870	01/29/2024

SALES DATA

OFF RECORD Number	DATE	TYPE INST	Q / U	V / I	RSN CD	SALE PRICE
2757/292	12/17/2024	SW	Q	I	01	950,400
GRANTOR: ARTISAN HOMES II LLC						
GRANTEE: MILLER GARY JAY & M						
2646/939	6/01/2023	QC	U	V	11	100
GRANTOR: ARTISAN HOMES LLC						
GRANTEE: ARTISAN HOMES II						

BUILDING NOTES

EXTRA FEATURES

LN	OB/XF CODE	DESCRIPTION	BLD	CAP	L	W	UNITS	UT	Adj R	ADJ UNIT PRICE	ORIG COND	YEAR ON	YEAR ACTUAL	Q	% COND	OB/XF MKT VALUE	NOTES
1	0855	CONC PAVER	0	100	0	0	666.00	SF	10.00	10.00	100	2025	2024		100	6,660	

BUILDING DIMENSIONS

FUS=[YR=2025;ORIG=20,0] W18 S10 W14 S33 E14 S7 E18 N50 $
FUS=[YR=2025;ORIG=-20,0] W15 S7 D3L3 W14 S31 S2 E10 D4R4 S3 E3 E11 E4 N50 $
FGR=[YR=2025;ORIG=-60,0] W15 S24 S3 W7 S5 S6 S5 S7 E22 N50 $
FOP=[YR=2025;ORIG=-92,0] E17 S24 W7 S3 W10 N27 $
FOP=[YR=2025;ORIG=-52,0] E17 S7 D3L3 W14 N10 $
STR=[YR=2025;ORIG=-48,50] E5 S14 E4 S6 W12 N6 E3 N14 $
BAS=[YR=2025;ORIG=-92,27] E10 S5 W5 S11 W5 N16 $
FOP=[YR=2025;ORIG=-52,43] E10 D4R4 S3 W5 W5 W4 N2 N5 $
UST=[YR=2025;ORIG=-92,43] S7 E10 N7 W5 W5 $
FST=[YR=2025;ORIG=-82,32] W5 S11 E5 N5 N6 $
FOP=[YR=2025;ORIG=-35,50] E11 S5 W11 N5 $

LAND DESCRIPTION

TOTAL OB/XF 6,660

LN	USE CODE	CLS	LAND USE DESCRIPTION	CAP	RD	LOC ZONE	FRONT	DEPTH	TOT LND UTS	UNIT TYPE	DT	DPTH FACT	% COND	TOT ADJ	UNIT PRICE	ADJ UNIT PRICE	LAND VALUE	OTHER ADJUSTMENTS AND NOTES	YEAR	DENSITY	DECL	FRZ	YR	CONSRV
1	000116	C	RES MARSH	100		PUD	0.00	0.00	1.00	LT		1.00	1.00	1.00	120,000.00	120,000.00	120,000							

REVIEW DATE 04/04/2024 BY MLU Total Acres: 0.00 Total Land Value: 120,000 Market: 0 Agricultural: 0 Common: 120,000 PRINTED 07/30/2025 BY SYS