LOT B-32
VILLAS AT OYSTER BAY HARBOURS
PBK 8/229

ANSTEAD GREG & SUSAN
96588 COMPASS POINT DRIVE
FERNANDINA BEACH, FL 32034

2025

46-3N-28-5481-0B32-0000

BUILDING CHARACTERISTICS

ELEMENT	CD	CONSTRUCTION
Exterior Wall	17	CB STUCCO 50
Exterior Wall	31	HARDIE BRD 50
Roof Structur	08	IRREGULAR 100
Roof Cover	13	STAND SEAM 100
Interior Wall	05	DRYWALL 100
Interior Floo	11	CLAY TILE 60
Interior Floo	14	CARPET 40
Air Condition	03	CENTRAL 100
Heating Type	04	AIR DUCTED 100
Bedrooms		3 100
Bathrooms		2.5 100
Frame	03	MASONRY 100
Stories	2.	2. 100
Units		0 100
Quality	04	Quality Level 04
DOR CODE	0100	SINGLE FAMILY
MAP NUM		MKT AREA 04
NEIGHBORHOOD/LOC	4024.100	

AREA TYPE	TOTAL GROSS AREA	PCT OF BASE	YEAR	TOT ADJ AREA	SUBAREA MARKET VALUE
BAS	187	100	2022	187	44,000
BAS	2,192	100	2022	2,192	515,760
DCK	45	10	2022	4	941
FGR	1,334	55	2022	734	172,704
FOP	110	30	2022	33	7,764
FOP	110	30	2022	33	7,764
FOP	731	30	2022	219	51,529
FSP	238	40	2022	95	22,353
FST	42	55	2022	23	5,412
STR	56	10	2022	6	1,411
TOTALS	5,125			3,534	831,521

MARKET ADJUSTMENTS

TYPE	MDL	EFF. AREA	TOT ADJ PTS	EFF. BASE RATE	REPL. COST NEW	AYB	EYB	ECON	FNCT		NORM	% COND
0500	11	3,534	150.0444	237.07	837,805	2022	2022	0	0	0	0.75	99.25

1 SFR CUST – 100% - 2023 Heated Area: 2379 HX Base Yr 2023

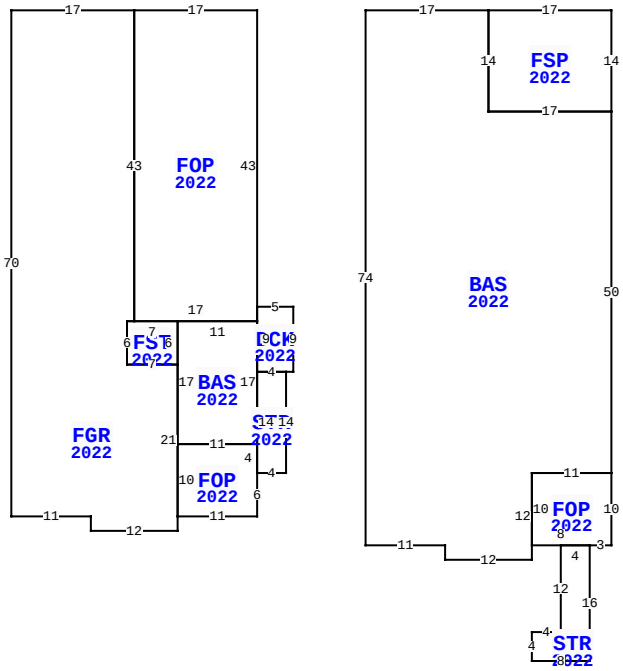

** This building has 11 Sub-Areas

96588 COMPASS POINT DR, FERNANDINA BEACH

BLD DATE		LGL DATE	
XF DATE		LAND DATE	05/07/2025 MLU
INC DATE		AG DATE	

NASSAU COUNTY PROPERTY

PAGE 1 of 1 4

VALUATION SUMMARY

VALUATION BY		STANDARD
Tax Group: 4	Tax Dist:	
BUILDING MARKET VALUE		831,521
TOTAL MARKET OB/XF VALUE		12,197
TOTAL LAND VALUE - MARKET		120,000
TOTAL MARKET VALUE		963,718
SOH/AGL Deduction		26,476
ASSESSED VALUE		937,242
TOTAL EXEMPTION VALUE	HX HB	50,722
BASE TAXABLE VALUE		886,520
TOTAL JUST VALUE		963,718
NCON VALUE		0
INCOME VALUE		
PREVIOUS YEAR MKT VALUE		965,729

PERMIT NUM	DESCRIPTION	AMT	ISSUED
220015894			10/21/2022
B2103461	NEW CONSTR	407,398	03/22/2021

SALES DATA

OFF RECORD Number	DATE	TYPE INST	Q U	V I	RSN CD	SALE PRICE
2599/0734	10/21/2022	WD	Q	I	02	738,600
GRANTOR: NEW ATLANTIC BUILDERS						
GRANTEE: ANSTEAD GREG & SUSA						
2441/1355	3/05/2021	SW	Q	V	01	115,000
GRANTOR: O B ISLAND HOMES LLC						
GRANTEE: NEW ATLANTIC BUILDE						

BUILDING NOTES

BUILDING DIMENSIONS

FOP=[YR=2022] W17 FGR=[YR=2022] W17 S70 E11 S2 E12 N2 FOP=[YR=2022] E11 N6 STR=[YR=2022] E4 N14 DCK=[YR=2022] E1 N9 W5 S9 E4$ W4 S14$ N4 BAS=[YR=2022] N17 W11 FST=[YR=2022] W7 S6 E7 N6$ S17 E11$ W11 S10$ N21 W7 N6 E1 N43$ S43 E17 N43$ PTR=E15 BAS=[YR=2022] E17 FSP=[YR=2022] E17 S14 W17 N14$ S14 E17 S50 FOP=[YR=2022] S10 W3 STR=[YR=2022] S16W8 N4 E4 N12 E4$ W8 N10 E11$ W11 S12 W12 N2 W11 N74$ W15$.

EXTRA FEATURES

LN	OB/XF CODE	DESCRIPTION	BLD	CAP	L	W	UNITS	UT	Adj R	ADJ UNIT PRICE	ORIG COND	YEAR ON	YEAR ACTUAL	Q	% COND	OB/XF MKT VALUE	NOTES
1	0504	FP-ELECTRI	0	100	0	0	1.00	UT	2,000.00	2,000.00	100	2022	2022	3	99	1,980	
2	0855	CONC PAVER	0	100	0	0	1,032.00	SF	10.00	10.00	100	2022	2022	3	99	10,217	

LAND DESCRIPTION

TOTAL OB/XF 12,197

LN	USE CODE	CLS	LAND USE DESCRIPTION	CAP	RD	LOC ZONE	FRONT	DEPTH	TOT LND UTS	UNIT TYPE	DT	DPTH FACT	% COND	TOT ADJ	UNIT PRICE	ADJ UNIT PRICE	LAND VALUE	OTHER ADJUSTMENTS AND NOTES	YEAR	DENSITY	DECL	FRZ	YR	CONSRV
1	000116	C	RES MARSH	100		PUD	0.00	0.00	1.00	LT		1.00	1.00	1.00	120,000.00	120,000.00	120,000							

REVIEW DATE 11/14/2022 BY DJ Total Acres: 0.00 Total Land Value: 120,000 Market: 0 Agricultural: 0 Common: 120,000 PRINTED 07/30/2025 BY SYS