LOTS B-11 & B-12
VILLAS AT OYSTER BAY HARBOURS
PBK 8/229

WANDER STEVEN M & KATHRYN W
96450 CONCH CT
FERNANDINA BEACH, FL 32034

**2025**

**46-3N-28-5481-0B12-0000**

## BUILDING CHARACTERISTICS

| ELEMENT | CD | CONSTRUCTION |
|---|---|---|
| Exterior Wall | 31 | HARDIE BRD 100 |
| Roof Structur | 08 | IRREGULAR 100 |
| Roof Cover | 12 | MODULAR MT 100 |
| Interior Wall | 05 | DRYWALL 100 |
| Interior Floo | 12 | HARDWOOD 90 |
| Interior Floo | 11 | CLAY TILE 10 |
| Air Condition | 03 | CENTRAL 100 |
| Heating Type | 03 | FORCED AIR 100 |
| Bedrooms | | 4 100 |
| Bathrooms | | 4 100 |
| Frame | 02 | WOOD FRAME 100 |
| Stories | 1. | 1. 100 |
| Quality | 04 | Quality Level 04 |
| DOR CODE | 0100 | SINGLE FAMILY |
| MAP NUM | | MKT AREA 04 |
| NEIGHBORHOOD/LOC | 4024.100 | |

| AREA TYPE | TOTAL GROSS AREA | PCT OF BASE | YEAR | TOT ADJ AREA | SUBAREA MARKET VALUE |
|---|---|---|---|---|---|
| BAS | 2,877 | 100 | 2023 | 2,877 | 877,111 |
| FGR | 1,003 | 55 | 2023 | 552 | 168,288 |
| FOP | 224 | 30 | 2023 | 67 | 20,426 |
| FSP | 710 | 40 | 2023 | 284 | 86,583 |
| STP | 8 | 10 | 2023 | 1 | 305 |
| STP | 12 | 10 | 2023 | 1 | 305 |
| UOP | 523 | 20 | 2023 | 105 | 32,011 |
| TOTALS | 5,357 | | | 3,887 | 1,185,030 |

## MARKET ADJUSTMENTS

| TYPE | MDL | EFF. AREA | TOT ADJ PTS | EFF. BASE RATE | REPL. COST NEW | AYB | EYB | ECON | FNCT | | NORM | % COND |
|---|---|---|---|---|---|---|---|---|---|---|---|---|
| 0500 | 12 | 3,887 | 192.9564 | 304.87 | 1,185,030 | 2023 | 2023 | 0 | 0 | 0 | 0.00 | 100.00 |

1 SFR CUST – 100% - 2025 Heated Area: 2877 HX Base Yr 2025

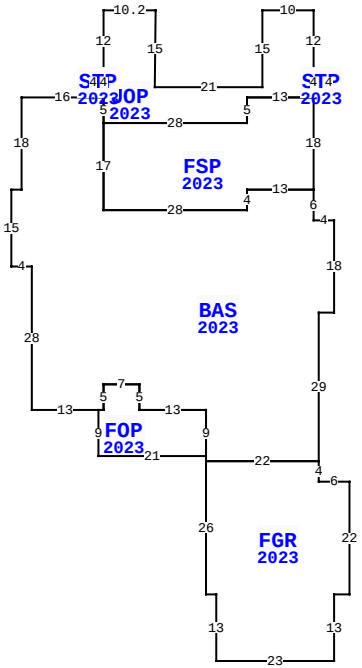


96450 CONCH CT, FERNANDINA BEACH

| | | | |
|---|---|---|---|
| BLD DATE | | LGL DATE | |
| XF DATE | | LAND DATE | 05/07/2025 MLU |
| INC DATE | | AG DATE | |

## NASSAU COUNTY PROPERTY

PAGE 1 of 1 4

### VALUATION SUMMARY

| | | |
|---|---|---|
| VALUATION BY | | STANDARD |
| Tax Group: 4 | Tax Dist: | |
| BUILDING MARKET VALUE | | 1,185,030 |
| TOTAL MARKET OB/XF VALUE | | 64,670 |
| TOTAL LAND VALUE - MARKET | | 312,000 |
| TOTAL MARKET VALUE | | 1,561,700 |
| SOH/AGL Deduction | | 0 |
| ASSESSED VALUE | | 1,561,700 |
| TOTAL EXEMPTION VALUE | HX HB | 50,722 |
| BASE TAXABLE VALUE | | 1,510,978 |
| TOTAL JUST VALUE | | 1,561,700 |
| NCON VALUE | | 0 |
| INCOME VALUE | | |
| PREVIOUS YEAR MKT VALUE | | 1,182,868 |

| PERMIT NUM | DESCRIPTION | AMT | ISSUED |
|---|---|---|---|
| 23001657 | ADDITION | 16,000 | 02/07/2023 |
| 2300546 | SWIM POOL | 95,291 | 01/13/2023 |
| 22006627 | NEW CONSTR | 517,814 | 04/27/2022 |

## SALES DATA

| OFF RECORD Number | DATE | TYPE INST | Q / U | V / I | RSN CD | SALE PRICE |
|---|---|---|---|---|---|---|
| 2747/1096 | 11/01/2024 | WD | Q | I | 01 | 2,200,000 |
| GRANTOR: MENINGER JASON PAUL & | | | | | | |
| GRANTEE: WANDER STEVEN M & K | | | | | | |
| 2415/0099 | 12/08/2020 | SW | Q | V | 05 | 270,000 |
| GRANTOR: O B ISLAND HOMES LLC | | | | | | |
| GRANTEE: MENINGER JASON PAUL | | | | | | |

## BUILDING NOTES

## EXTRA FEATURES

| LN | OB/XF CODE | DESCRIPTION | BLD | CAP | L | W | UNITS | UT | Adj R | ADJ UNIT PRICE | ORIG COND | YEAR ON | YEAR ACTUAL | Q | % COND | OB/XF MKT VALUE | NOTES |
|---|---|---|---|---|---|---|---|---|---|---|---|---|---|---|---|---|---|
| 1 | 0855 | CONC PAVER | 0 | 100 | 0 | 0 | 2,199.00 | SF | 10.00 | 10.00 | 100 | 2023 | 2023 | | 100 | 21,990 | |
| 2 | 0500 | FP-PRE FAB | 0 | 100 | 0 | 0 | 1.00 | UT | 3,500.00 | 3,500.00 | 100 | 2023 | 2023 | | 100 | 3,500 | |
| 3 | 0861 | POOL GUNIT | 0 | 100 | 0 | 0 | 315.00 | SF | 85.00 | 85.00 | 100 | 2023 | 2023 | | 98 | 26,240 | |
| 4 | 0912 | SCRN RM G | 0 | 100 | 0 | 0 | 667.00 | SF | 20.00 | 20.00 | 100 | 2023 | 2023 | | 97 | 12,940 | |

## BUILDING DIMENSIONS

BAS=[YR=2023;ORIG=90,10] W13 S4 W28 N17 N5 W16 S18 W2 S15 E4 S28 E13 E1 N5 E7 S5 E13 S9 S1 E22 N29 E3 N18 W4 N6 $
FGR=[YR=2023;ORIG=69,63] E22 S4 E6 S22 W3 S13 W23 N13 W2 N26 $
FSP=[YR=2023;ORIG=49,-3] E28 N5 E13 S18 W13 S4 W28 N17 $
UOP=[YR=2023;ORIG=49,-3] N5 N1 N4 N12 E10.2 D15L0.2 E21 N15 E10 S12 S4 S1 W13 S5 W28 $
FOP=[YR=2023;ORIG=48,53] E1 N5 E7 S5 E13 S9 W21 N9 $
STP=[YR=2023;ORIG=90,-13] E3 S4 W3 N4 $
STP=[YR=2023;ORIG=47,-13] E2 S4 W2 N4 $
.

## LAND DESCRIPTION

TOTAL OB/XF 64,670

| LN | USE CODE | CLS | LAND USE DESCRIPTION | CAP | RD | LOC ZONE | FRONT | DEPTH | TOT LND UTS | UNIT TYPE | DT | DPTH FACT | % COND | TOT ADJ | UNIT PRICE | ADJ UNIT PRICE | LAND VALUE | OTHER ADJUSTMENTS AND NOTES | YEAR | DENSITY | DECL | FRZ | YR | CONSRV |
|---|---|---|---|---|---|---|---|---|---|---|---|---|---|---|---|---|---|---|---|---|---|---|---|---|
| 1 | 000116 | C | RES MARSH | 100 | | | 0.00 | 0.00 | 1.00 | LT | | 1.00 | 1.00 | 1.30 | 120,000.00 | 156,000.00 | 156,000 | | | | | | | |
| 2 | 000116 | C | RES MARSH | 100 | | PUD | 0.00 | 0.00 | 1.00 | LT | | 1.00 | 1.00 | 1.30 | 120,000.00 | 156,000.00 | 156,000 | | | | | | | |

REVIEW DATE 07/12/2023 BY DJ Total Acres: 0.00 Total Land Value: 312,000 Market: 0 Agricultural: 0 Common: 312,000 PRINTED 07/30/2025 BY SYS