BLOCK 3 LOT 7
IN OR 1539/271
OYSTER BAY #1 PB 5/262

DRAGER LIVING TRUST/DRAGER JAMES M TRUSTEE
96359 OYSTER BAY DRIVE
FERNANDINA BEACH, FL 32034

2025

46-3N-28-5480-0003-0070

NASSAU COUNTY PROPERTY

BUILDING CHARACTERISTICS

ELEMENT	CD	CONSTRUCTION
Exterior Wall	31	HARDIE BRD 100
Roof Structur	08	IRREGULAR 100
Roof Cover	03	COMP SHNGL 100
Interior Wall	05	DRYWALL 100
Interior Floo	11	CLAY TILE 50
Interior Floo	12	HARDWOOD 50
Air Condition	03	CENTRAL 100
Heating Type	04	AIR DUCTED 100
Bedrooms		5 100
Bathrooms		4.5 100
Frame	02	WOOD FRAME 100
Stories	2.	2. 100
Units		0 100
Occupancy	00	NONE 100
Quality	04	Quality Level 04
DOR CODE	0100	SINGLE FAMILY
MAP NUM		MKT AREA 04
NEIGHBORHOOD/LOC	4024.00	

AREA TYPE	TOTAL GROSS AREA	PCT OF BASE	YEAR	TOT ADJ AREA	SUBAREA MARKET VALUE
BAS	1,546	100	2006	1,546	271,105
DCK	72	10	2006	7	1,228
DCK	164	10	2006	16	2,806
FGR	850	55	2006	468	82,068
FOP	120	30	2006	36	6,313
FOP	120	30	2006	36	6,313
FOP	408	30	2006	122	21,394
FSP	684	40	2006	274	48,049
FSP	710	40	2006	284	49,802
FUS	2,409	100	2006	2,409	422,440
TOTALS	7,258			5,338	936,068

MARKET ADJUSTMENTS

TYPE	MDL	EFF. AREA	TOT ADJ PTS	EFF. BASE RATE	REPL. COST NEW	AYB	EYB	ECON	FNCT		NORM	% COND
0500	01	5,338	118.7025	187.55	1,001,142	2006	2010	0	0	0	6.50	93.50

1 SFR CUST – 100% - 2007 Heated Area: 4095 HX Base Yr 2007

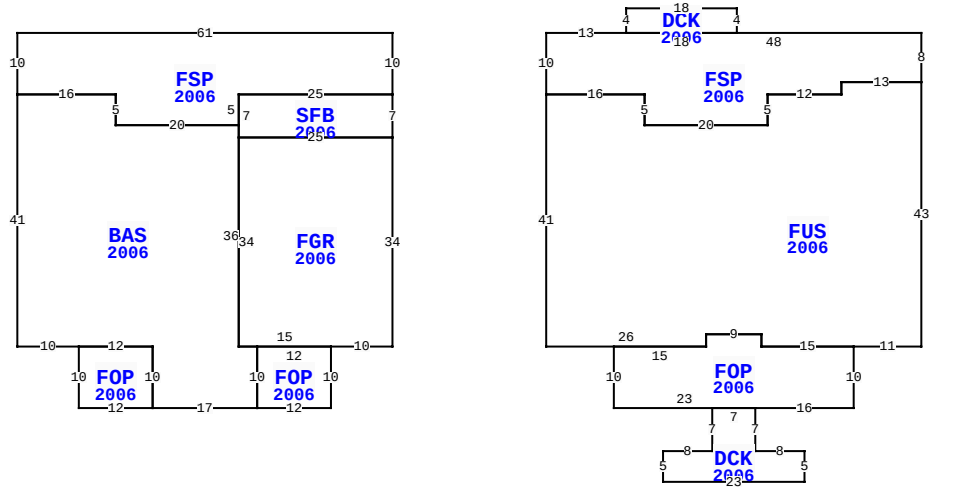

** This building has 11 Sub-Areas

96359 OYSTER BAY DR, FERNANDINA BEACH

BLD DATE		LGL DATE	
XF DATE		LAND DATE	05/08/2025 MLU
INC DATE		AG DATE	

EXTRA FEATURES

LN	OB/XF CODE	DESCRIPTION	BLD	CAP	L	W	UNITS	UT	Adj R	ADJ UNIT PRICE	ORIG COND	YEAR ON	YEAR ACTUAL	Q	% COND	OB/XF MKT VALUE	NOTES
1	0504	FP-ELECTRI	0	100	0	0	1.00	UT	2,000.00	2,000.00	100	2006	2006	3	89	1,780	
2	0410	ELEVATOR	0	100	0	0	1.00	UT	15,000.00	15,000.00	100	2006	2006	3	100	15,000	
3	0812	CONCRETE C	0	100	0	0	2,221.00	SF	4.00	4.00	100	2006	2006	3	86	7,640	
4	0855	CONC PAVER	0	100	0	0	216.00	SF	10.00	10.00	100	2006	2006	3	86	1,858	
5	1242	WD DECK A	0	100	12	20	240.00	SF	10.00	10.00	100	2007	2007	3	27	648	
6	0911	SCRN RM A	0	100	12	20	240.00	SF	17.50	17.50	100	2007	2007	3	27	1,134	
7	0910	SCRN RM L	0	100	12	20	240.00	SF	15.00	15.00	100	2007	2007	3	27	972	

VALUATION SUMMARY

VALUATION BY		STANDARD
Tax Group: 4	Tax Dist:	
BUILDING MARKET VALUE		936,068
TOTAL MARKET OB/XF VALUE		29,032
TOTAL LAND VALUE - MARKET		142,500
TOTAL MARKET VALUE		1,107,600
SOH/AGL Deduction		534,426
ASSESSED VALUE		573,174
TOTAL EXEMPTION VALUE	HX HB	50,722
BASE TAXABLE VALUE		522,452
TOTAL JUST VALUE		1,107,600
NCON VALUE		0
INCOME VALUE		
PREVIOUS YEAR MKT VALUE		1,062,975

PERMIT NUM	DESCRIPTION	AMT	ISSUED
B1808808	REMODEL	42,000	08/28/2018
B19566	SWIM POOL	20,000	03/01/2007
M11571	MECH OTHER	0	05/01/2006
E17063	ELEC OTHER	2,000	04/01/2006
P10979	OTHER	0	04/01/2006
C17323	CO ISSUED	306,920	03/01/2006

SALES DATA

OFF RECORD Number	DATE	TYPE INST	Q / U	V / I	RSN CD	SALE PRICE
1539/0271	12/04/2007	WD	Q	I	01	100
GRANTOR: DRAGER JAMES M & BARB						
GRANTEE: DRAGER JAMES M & BA						
1462/1976	12/04/2006	WD	Q	I		699,000
GRANTOR: GARNER MARK J & REBEK						
GRANTEE: DRAGER JAMES M & BA						

BUILDING NOTES

BUILDING DIMENSIONS

FSP=[YR=2006] W61 S10 BAS=[YR=2006] S41 E10 FOP=[YR=2006] S10 E12 N10 W12$ E12 S10 E17 FOP=[YR=2006] E12 N10 FGR=[YR=2006] E10 N34SFB=[YR=2006] N7 W25 S7 E25$ W25 S34 E15$ W12 S10$ N10 W3 N36 W20 N5 W16$ E16 S5 E20 N5 E25 N10$ PTR=[YR=2006] E25 FSP=[YR=2006] E13 DCK=[YR=2006] N4 E18 S4 W18$ E48 S8 FUS=[YR=2006] S43 W11 FOP=[YR=2006] S10 W16 DCK=[YR=2006] S7 E8 S5 W23 N5 E8 N7 E7$ W23 N10 E15 N2 E9 S2 E15$ W15 N2 W9 S2 W26 N41 E16 S5 E20 N5 E12 N2 E13$ W13 S2 W12 S5 W20 N5 W16 N10$ W25$.

LAND DESCRIPTION

TOTAL OB/XF 29,032

LN	USE CODE	CLS	LAND USE DESCRIPTION	CAP	RD	LOC ZONE	FRONT	DEPTH	TOT LND UTS	UNIT TYPE	DT	DPTH FACT	% COND	TOT ADJ	UNIT PRICE	ADJ UNIT PRICE	LAND VALUE	OTHER ADJUSTMENTS AND NOTES	YEAR	DENSITY	DECL	FRZ	YR	CONSRV
1	000134	C	RES POND	100		PUD	0.00	0.00	1.00	LT		1.00	1.00	1.00	142,500.00	142,500.00	142,500							

REVIEW DATE 05/12/2019 BY KBA Total Acres: 0.00 Total Land Value: 142,500 Market: 0 Agricultural: 0 Common: 142,500 PRINTED 07/30/2025 BY SYS