BLOCK 3 LOT 4
IN OR 2153/1924
OYSTER BAY #1 PB 5/262

CADE FAMILY TRUST/CADE CANDACE A TRUSTEE
96295 OYSTER BAY DR
FERNANDINA BEACH, FL 32034

2025

46-3N-28-5480-0003-0040

BUILDING CHARACTERISTICS

ELEMENT	CD	CONSTRUCTION
Exterior Wall	31	HARDIE BRD 100
Roof Structur	03	GABLE/HIP 100
Roof Cover	03	COMP SHNGL 100
Interior Wall	05	DRYWALL 100
Interior Floo	12	HARDWOOD 100
Air Condition	03	CENTRAL 100
Heating Type	04	AIR DUCTED 100
Bedrooms		3 100
Bathrooms		2.5 100
Frame	02	WOOD FRAME 100
Stories	1.5	1.5 100
Units		0 100
Occupancy	00	NONE 100
Quality	04	Quality Level 04

DOR CODE 0100 SINGLE FAMILY
MAP NUM | MKT AREA 04
NEIGHBORHOOD/LOC 4024.00

AREA TYPE	TOTAL GROSS AREA	PCT OF BASE	YEAR	TOT ADJ AREA	SUBAREA MARKET VALUE
BAS	1,659	100	1995	1,659	257,357
FEP	260	80	1995	208	32,267
FGR	562	55	1995	309	47,934
FOP	288	30	1995	86	13,341
FST	98	55	2017	54	8,377
FUS	640	100	1995	640	99,282
FUS	352	100	2008	352	54,605
STP	120	10	2018	12	1,861
TOTALS	3,979			3,320	515,025

MARKET ADJUSTMENTS

TYPE	MDL	EFF. AREA	TOT ADJ PTS	EFF. BASE RATE	REPL. COST NEW	AYB	EYB	ECON	FNCT		NORM	% COND
0500	01	3,320	108.1920	170.94	567,521	1995	2005	0	0	0	9.25	90.75

1 SFR CUST – 100% - 2021 Heated Area: 2651 HX Base Yr 2021

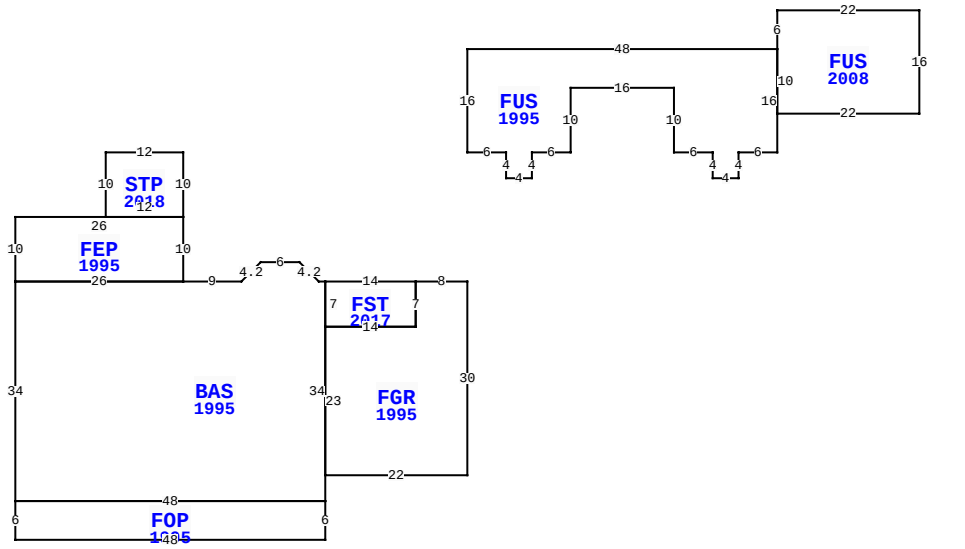

96295 OYSTER BAY DR, FERNANDINA BEACH

BLD DATE		LGL DATE	
XF DATE		LAND DATE	05/08/2025 MLU
INC DATE		AG DATE	

NASSAU COUNTY PROPERTY

PAGE 1 of 1 4

VALUATION SUMMARY

VALUATION BY		STANDARD
Tax Group: 4	Tax Dist:	
BUILDING MARKET VALUE		515,025
TOTAL MARKET OB/XF VALUE		9,206
TOTAL LAND VALUE - MARKET		142,500
TOTAL MARKET VALUE		666,731
SOH/AGL Deduction		254,978
ASSESSED VALUE		411,753
TOTAL EXEMPTION VALUE	HX HB VX	55,722
BASE TAXABLE VALUE		356,031
TOTAL JUST VALUE		666,731
NCON VALUE		0
INCOME VALUE		
PREVIOUS YEAR MKT VALUE		642,346

PERMIT NUM	DESCRIPTION	AMT	ISSUED
R1703438	REPAIR/RRF	19,200	06/01/2017
B1702954	REMODEL	82,000	05/01/2017
9501610	NEW CONSTR	120,000	01/01/1995
B9401558	FOUNDATION	2,300	12/01/1994

SALES DATA

OFF RECORD Number	DATE	TYPE INST	Q / U	V / I	RSN CD	SALE PRICE
2153/1924	10/02/2017	WD	U	I	11	100
GRANTOR: CADE ERVIN E & CANDAC						
GRANTEE: CADE FAMILY TRUST E						
1901/0514	1/30/2014	SW	Q	I	02	254,000
GRANTOR: FEDERAL NATIONAL MORT						
GRANTEE: CADE ERVIN E & CAND						

BUILDING NOTES

BUILDING DIMENSIONS

FGR=[YR=1995] W8 FST=[YR=2017] W14 BAS=[YR=1995] W1 U3 L3 W6 L3 D3 W9 FEP=[YR=1995] N10 STP=[YR=2018] N10 W12 S10 E12$ W26 S10 E26$ W26 S34 FOP=[YR=1995] S6 E48 N6 W48$E48 N34$ S7 E14 N7$ S7 W14 S23E22 N30$ PTR=N20 FUS=[YR=1995] N16 E48 FUS=[YR=2008] N6 E22 S16 W22 N10$ S16 W6 S4 W4 N4 W6 N10 W16 S10 W6 S4 W4 N4 W6$ S20$.

EXTRA FEATURES

LN	OB/XF CODE	DESCRIPTION	BLD	CAP	L	W	UNITS	UT	Adj R	ADJ UNIT PRICE	ORIG COND	YEAR ON	YEAR ACTUAL	Q	% COND	OB/XF MKT VALUE	NOTES
1	0812	CONCRETE C	0	100	0	0	1,251.00	SF	4.00	4.00	100	1995	1995	3	68	3,403	
2	0500	FP-PRE FAB	0	100	0	0	1.00	UT	3,500.00	3,500.00	100	1995	1995	3	76	2,660	
3	0855	CONC PAVER	0	100	18	18	324.00	SF	10.00	10.00	100	2018	2018	3	97	3,143	

LAND DESCRIPTION

TOTAL OB/XF 9,206

LN	USE CODE	CLS	LAND USE DESCRIPTION	CAP	RD	LOC ZONE	FRONT	DEPTH	TOT LND UTS	UNIT TYPE	DT	DPTH FACT	% COND	TOT ADJ	UNIT PRICE	ADJ UNIT PRICE	LAND VALUE	OTHER ADJUSTMENTS AND NOTES	YEAR	DENSITY	DECL	FRZ	YR	CONSRV
1	000134	C	RES POND	100		PUD	0.00	0.00	1.00	LT		1.00	1.00	1.00	142,500.00	142,500.00	142,500							

REVIEW DATE 05/12/2019 BY KBA Total Acres: 0.00 Total Land Value: 142,500 Market: 0 Agricultural: 0 Common: 142,500 PRINTED 07/30/2025 BY SYS