BLOCK 1 LOT 9
IN OR 2381/29
ESMT IN OR 740/1627

PARENT FRANK G LIVING TRUST &/ZENO PATRICIA L LIVI
96215 OYSTER BAY DRIVE
FERNANDINA BEACH, FL 32034

2025

46-3N-28-5480-0001-0090

NASSAU COUNTY PROPERTY

BUILDING CHARACTERISTICS

ELEMENT	CD	CONSTRUCTION
Exterior Wall	31	HARDIE BRD 100
Roof Structur	08	IRREGULAR 100
Roof Cover	03	COMP SHNGL 100
Interior Wall	05	DRYWALL 100
Interior Floo	12	HARDWOOD 70
Interior Floo	14	CARPET 30
Air Condition	03	CENTRAL 100
Heating Type	04	AIR DUCTED 100
Bedrooms		4 100
Bathrooms		3.5 100
Frame	02	WOOD FRAME 100
Stories	2.	2. 100
Units		0 100
Occupancy	00	NONE 100
Quality	04	Quality Level 04
DOR CODE	0100	SINGLE FAMILY
MAP NUM		MKT AREA 04
NEIGHBORHOOD/LOC	4024.00	

AREA TYPE	TOTAL GROSS AREA	PCT OF BASE	YEAR	TOT ADJ AREA	SUBAREA MARKET VALUE
BAS	1,609	100	1998	1,609	250,961
BAS	72	100	2024	72	11,230
DCK	448	10	2024	45	7,019
FEP	120	80	2020	96	14,973
FGR	672	55	1998	370	57,710
FOP	21	30	1998	6	936
FOP	264	30	1998	79	12,322
FUS	364	100	1998	364	56,775
FUS	852	100	1998	852	132,890
STR	35	10	2024	4	624
TOTALS	4,457			3,497	545,439

MARKET ADJUSTMENTS

TYPE	MDL	EFF. AREA	TOT ADJ PTS	EFF. BASE RATE	REPL. COST NEW	AYB	EYB	ECON	FNCT		NORM	% COND
0500	01	3,497	110.6070	174.76	611,136	1998	2002	0	0	0	10.75	89.25

1 SFR CUST – 100% - 2021 Heated Area: 2897 HX Base Yr 2021

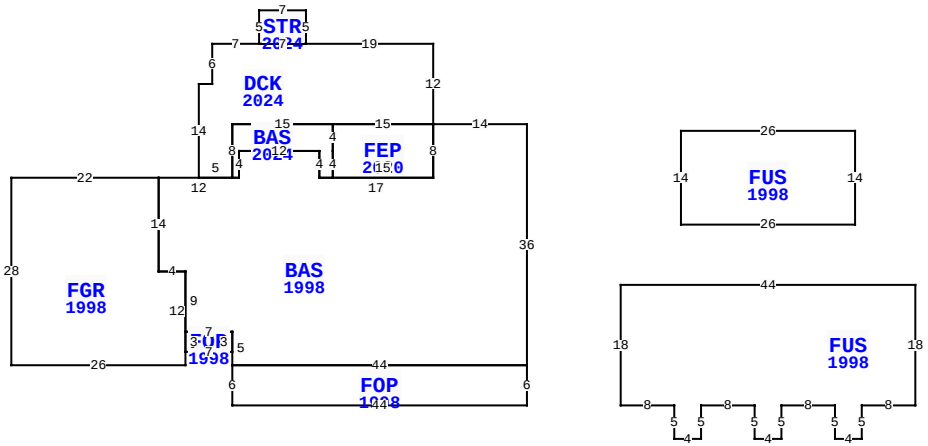

96215 OYSTER BAY DR, FERNANDINA BEACH

BLD DATE		LGL DATE	
XF DATE		LAND DATE	05/08/2025 MLU
INC DATE		AG DATE	

VALUATION SUMMARY

VALUATION BY		STANDARD
Tax Group: 4	Tax Dist:	
BUILDING MARKET VALUE		545,439
TOTAL MARKET OB/XF VALUE		18,997
TOTAL LAND VALUE - MARKET		142,500
TOTAL MARKET VALUE		706,936
SOH/AGL Deduction		228,874
ASSESSED VALUE		478,062
TOTAL EXEMPTION VALUE	HX HB	50,722
BASE TAXABLE VALUE		427,340
TOTAL JUST VALUE		706,936
NCON VALUE		0
INCOME VALUE		
PREVIOUS YEAR MKT VALUE		680,132

PERMIT NUM	DESCRIPTION	AMT	ISSUED
B230006330	REMODEL	115,000	05/16/2023
R1706932	REPAIR/RRF	11,850	08/02/2017
P1216158	OTHER	0	10/01/2012
974370	NEW CONSTR	220,000	10/01/1997

SALES DATA

OFF RECORD Number	DATE	TYPE INST	Q / U	V / I	RSN CD	SALE PRICE
2381/0029	7/31/2020	WD	Q	I	01	532,500
GRANTOR: LAVINO GEORGE ALEXAND						
GRANTEE: PARENT FRANK G LIVI						
1859/1250	5/30/2013	WD	Q	I	02	450,000
GRANTOR: D'ANNA FRANK						
GRANTEE: LAVINO GEORGE ALEXA						

BUILDING NOTES

BUILDING DIMENSIONS

BAS=[YR=1998;ORIG=0,0] W14 S8 W17 N4 W12 S4 W12 S14 E4 S9 E7 S5 E44 N36 $
FUS=[YR=1998;ORIG=14,24] E44 S18 W8 S5 W4 N5 W8 S5 W4 N5 W8 S5 W4 N5 W8 N18 $
FGR=[YR=1998;ORIG=-55,8] W22 S28 E26 N2 N12 W4 N14 $
DCK=[YR=2024;ORIG=-14,-12] W19 W7 W7 S6 W2 S14 E5 N8 E15 E15 N12 $
FUS=[YR=1998;ORIG=49,1] W26 S14 E26 N14 $
FOP=[YR=1998;ORIG=-44,36] S6 E44 N6 W44 $
FEP=[YR=2020;ORIG=-14,0] W15 S4 S4 E15 N8 $
BAS=[YR=2024;ORIG=-29,0] W15 S8 E1 N4 E12 S4 E2 N4 N4 $
STR=[YR=2024;ORIG=-33,-17] W7 S5 E7 N5 $

EXTRA FEATURES

LN	OB/XF CODE	DESCRIPTION	BLD	CAP	L	W	UNITS	UT	Adj R	ADJ UNIT PRICE	ORIG COND	YEAR ON	YEAR ACTUAL	Q	% COND	OB/XF MKT VALUE	NOTES
1	0500	FP-PRE FAB	0	100	0	0	1.00	UT	3,500.00	3,500.00	100	1998	1998	3	80	2,800	
2	0810	CONCRETE A	0	100	0	0	298.00	SF	6.50	6.50	100	1998	1998	3	73	1,414	
3	0810	CONCRETE A	0	100	0	0	1,216.00	SF	6.50	6.50	100	1998	1998	3	73	5,770	
4	0462	ST/AL FNC	0	100	120	0	480.00	SF	10.00	10.00	100	2013	2013	3	68	3,264	
5	0463	FENCE GATE	0	100	0	0	2.00	UT	300.00	300.00	100	2013	2013	3	83	498	
6	0855	CONC PAVER	1	100	24	16	384.00	SF	10.00	10.00	100	2024	2022		100	3,840	
7	1076	TRELLIS A	1	100	12	16	192.00	SF	7.50	7.50	100	2024	2023		98	1,411	

LAND DESCRIPTION

TOTAL OB/XF 18,997

LN	USE CODE	CLS	LAND USE DESCRIPTION	CAP	RD	LOC ZONE	FRONT	DEPTH	TOT LND UTS	UNIT TYPE	DT	DPTH FACT	% COND	TOT ADJ	UNIT PRICE	ADJ UNIT PRICE	LAND VALUE	OTHER ADJUSTMENTS AND NOTES	YEAR	DENSITY	DECL	FRZ	YR	CONSRV
1	000134	C	RES POND	100		PUD	0.00	0.00	1.00	LT		1.00	1.00	1.00	142,500.00	142,500.00	142,500							

REVIEW DATE 11/14/2023 BY DJ Total Acres: 0.00 Total Land Value: 142,500 Market: 0 Agricultural: 0 Common: 142,500 PRINTED 07/30/2025 BY SYS