LOT 19
NORTH SHORE SUB PB 5/255-256

HARTING TREVER
94283 SUMMER BREEZE DR
FERNANDINA BEACH, FL 32034

2025

46-3N-28-5340-0019-0000

BUILDING CHARACTERISTICS

ELEMENT	CD	CONSTRUCTION
Exterior Wall	20	FACE BRICK 100
Roof Structur	08	IRREGULAR 100
Roof Cover	03	COMP SHNGL 100
Interior Wall	05	DRYWALL 100
Interior Floo	13	LVT/LAMNT 90
Interior Floo	11	CLAY TILE 10
Air Condition	03	CENTRAL 100
Heating Type	04	AIR DUCTED 100
Bedrooms		3 100
Bathrooms		3 100
Frame	02	WOOD FRAME 100
Stories	1.	1. 100
Units		0 100
Occupancy	00	NONE 100
Quality	03	Quality Level 03
DOR CODE	0100	SINGLE FAMILY
MAP NUM		MKT AREA 04
NEIGHBORHOOD/LOC	4021.00	

AREA TYPE	TOTAL GROSS AREA	PCT OF BASE	YEAR	TOT ADJ AREA	SUBAREA MARKET VALUE
BAS	2,406	100	2000	2,406	292,100
FGR	650	55	2000	358	43,463
FOP	90	30	2000	27	3,278
FOP	265	30	2000	80	9,712
PTO	273	5	2007	14	1,700
TOTALS	3,684			2,885	350,253

MARKET ADJUSTMENTS

TYPE	MDL	EFF. AREA	TOT ADJ PTS	EFF. BASE RATE	REPL. COST NEW	AYB	EYB	ECON	FNCT		NORM	% COND
0900	01	2,885	107.2540	141.58	408,458	2000	2005	0	0	0	14.25	85.75

1 SNGL FAM – 0% - 2023 Heated Area: 2406 HX Base Yr

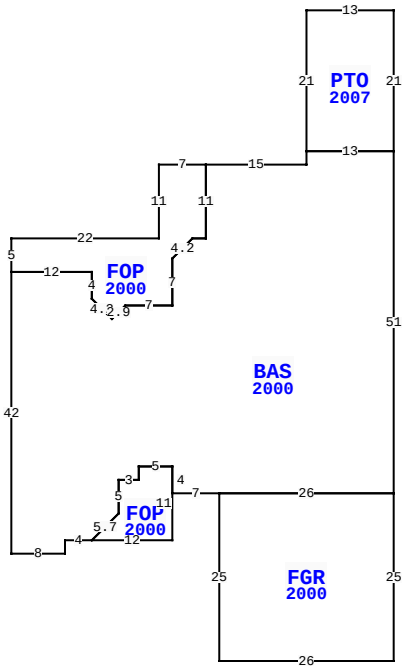

BLD DATE		LGL DATE	
XF DATE		LAND DATE	05/06/2025 MLU
INC DATE		AG DATE	

94283 SUMMER BREEZE DR, FERNANDINA BEACH

NASSAU COUNTY PROPERTY

PAGE 1 of 1 4

VALUATION SUMMARY

VALUATION BY	STANDARD
Tax Group: 4	Tax Dist:
BUILDING MARKET VALUE	350,253
TOTAL MARKET OB/XF VALUE	28,897
TOTAL LAND VALUE - MARKET	125,000
TOTAL MARKET VALUE	504,150
SOH/AGL Deduction	0
ASSESSED VALUE	504,150
TOTAL EXEMPTION VALUE	0
BASE TAXABLE VALUE	504,150
TOTAL JUST VALUE	504,150
NCON VALUE	0
INCOME VALUE	
PREVIOUS YEAR MKT VALUE	459,938

PERMIT NUM	DESCRIPTION	AMT	ISSUED

SALES DATA

OFF RECORD Number	DATE	TYPE INST	Q U	V I	RSN CD	SALE PRICE
2590/0831	9/08/2022	WD	Q	I	01	600,000
GRANTOR: CHAIRES JUSTIN & JAMI						
GRANTEE: HARTING TREVER						
1921/1765	6/09/2014	CT	U	I	18	185,500
GRANTOR: CLERK OF COURT						
GRANTEE: CHAIRES JUSTIN & JA						

BUILDING NOTES

BUILDING DIMENSIONS

PTO=[YR=2007] W13 S21 BAS=[YR=2000] S2 W15 FOP=[YR=2000] W7 S11 W22 S5 E12 S4 D3 R3 R2 U2 E7 N7 R3 U3 E2 N11$ S11 W2 D3 L3 S7 W7 D2 L2 L3 U3 N4 W12 S42 E8 N2 E4 FOP=[YR=2000] E12 N11 W5 S2 W3 S5 L4 D4 $ U4 R4 N5 E3 N2 E5 S4 E7 FGR=[YR=2000] S25 E26 N25 W26$ E26 N51 W13$ E13 N21$.

EXTRA FEATURES

LN	OB/XF CODE	DESCRIPTION	BLD	CAP	L	W	UNITS	UT	Adj R	ADJ UNIT PRICE	ORIG COND	YEAR ON	YEAR ACTUAL	Q	% COND	OB/XF MKT VALUE	NOTES
1	0500	FP-PRE FAB	0	0	0	0	1.00	UT	3,500.00	3,500.00	100	2000	2000	3	83	2,905	
2	0811	CONCRETE B	0	0	0	0	1,836.00	SF	5.20	5.20	100	2000	2000	3	77	7,351	
3	0911	SCRN RM A	0	0	0	0	1,225.00	SF	17.50	17.50	100	2003	2003	3	20	4,288	
4	0845	KOOL DECK	0	0	0	0	847.00	SF	7.25	7.25	100	2003	2003	3	82	5,035	
5	0861	POOL GUNIT	0	0	0	0	378.00	SF	85.00	85.00	100	2003	2003	3	29	9,318	

LAND DESCRIPTION

TOTAL OB/XF 28,897

LN	USE CODE	CLS	LAND USE DESCRIPTION	CAP	RD	LOC ZONE	FRONT	DEPTH	TOT LND UTS	UNIT TYPE	DT	DPTH FACT	% COND	TOT ADJ	UNIT PRICE	ADJ UNIT PRICE	LAND VALUE	OTHER ADJUSTMENTS AND NOTES	YEAR	DENSITY	DECL	FRZ	YR	CONSRV
1	000100	C	RES	0		RSF-1	0.00	0.00	1.00	LT		1.00	1.00	1.00	125,000.00	125,000.00	125,000							

REVIEW DATE 11/22/2019 BY KWA Total Acres: 0.00 Total Land Value: 125,000 Market: 0 Agricultural: 0 Common: 125,000 PRINTED 07/30/2025 BY SYS