LOT 4
IN OR 1023/706
NORTH SHORE SUB PB 5/255-256

TAYLOR MARK A & TERESA
94072 SUMMER BREEZE DRIVE
FERNANDINA BEACH, FL 32034

2025

46-3N-28-5340-0004-0000

NASSAU COUNTY PROPERTY

BUILDING CHARACTERISTICS

ELEMENT	CD	CONSTRUCTION
Exterior Wall	31	HARDIE BRD 80
Exterior Wall	20	FACE BRICK 20
Roof Structur	08	IRREGULAR 100
Roof Cover	03	COMP SHNGL 100
Interior Wall	05	DRYWALL 100
Interior Floo	14	CARPET 80
Interior Floo	12	HARDWOOD 20
Air Condition	03	CENTRAL 100
Heating Type	04	AIR DUCTED 100
Bedrooms		3 100
Bathrooms		2 100
Frame	02	WOOD FRAME 100
Stories	1.	1. 100
Units		0 100
Occupancy	00	NONE 100
Quality	03	Quality Level 03
DOR CODE	0100	SINGLE FAMILY
MAP NUM		MKT AREA 04
NEIGHBORHOOD/LOC	4021.00	

AREA TYPE	TOTAL GROSS AREA	PCT OF BASE	YEAR	TOT ADJ AREA	SUBAREA MARKET VALUE
BAS	1,728	100	1999	1,728	216,430
FGR	709	55	1999	390	48,847
FOP	144	30	1999	43	5,386
PTO	60	5	1999	3	376
USP	333	30	2007	100	12,525
TOTALS	2,974			2,264	283,563

MARKET ADJUSTMENTS

TYPE	MDL	EFF. AREA	TOT ADJ PTS	EFF. BASE RATE	REPL. COST NEW	AYB	EYB	ECON	FNCT		NORM	% COND
0900	01	2,264	109.7600	144.88	328,008	1999	1999	0	0	0	13.55	86.45

1 SNGL FAM – 100% - 2002 Heated Area: 1728 HX Base Yr 2002

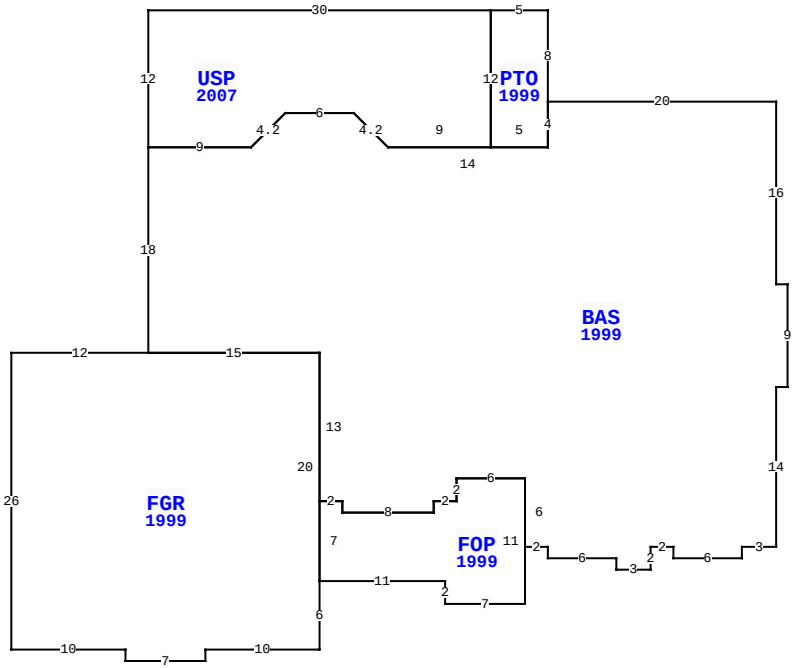

94072 SUMMER BREEZE DR, FERNANDINA BEACH

BLD DATE		LGL DATE	
XF DATE		LAND DATE	05/06/2025 MLU
INC DATE		AG DATE	

VALUATION SUMMARY

VALUATION BY		STANDARD
Tax Group: 4	Tax Dist:	
BUILDING MARKET VALUE		283,563
TOTAL MARKET OB/XF VALUE		13,648
TOTAL LAND VALUE - MARKET		125,000
TOTAL MARKET VALUE		422,211
SOH/AGL Deduction		247,333
ASSESSED VALUE		174,878
TOTAL EXEMPTION VALUE	HX HB	50,722
BASE TAXABLE VALUE		124,156
TOTAL JUST VALUE		422,211
NCON VALUE		0
INCOME VALUE		
PREVIOUS YEAR MKT VALUE		379,246

PERMIT NUM	DESCRIPTION	AMT	ISSUED
996361	NEW CONSTR	141,000	08/01/1999

SALES DATA

OFF RECORD Number	DATE	TYPE INST	Q / U	V / I	RSN CD	SALE PRICE
1023/0706	12/06/2001	WD	Q	I		180,000
GRANTOR: HANNIGAN JAMES F JR &						
GRANTEE: TAYLOR MARK A & TER						
0812/0692	11/05/1997	WD	Q	V	06	12,000
GRANTOR: DEGROVE CHARLES W JR						
GRANTEE: HANNIGAN J F JR & M						

BUILDING NOTES

BUILDING DIMENSIONS

BAS=[YR=1999] W20 PTO=[YR=1999] N8 W5 USP=[YR=2007] W30 S12 E9 R3 U3 E6 D3 R3 E9 N12$ S12 E5 N4$ S4 W14 L3 U3 W6 D3 L3 W9 S18 FGR=[YR=1999] W12 S26 E10 S1 E7 N1 E10 N6 FOP=[YR=1999] E11 S2 E7 N11 W6 S2 W2 S1 W8 N1 W2 S7$ N20 W15$ E15 S13 E2 S1 E8 N1 E2 N2 E6 S6 E2 S1 E6 S1 E3 N2 E2 S1 E6 N1 E3 N14 E1 N9 W1 N16$.

EXTRA FEATURES

L N	OB/XF CODE	DESCRIPTION	BLD	CAP	L	W	UNITS	UT	Adj R	ADJ UNIT PRICE	ORIG COND	YEAR ON	YEAR ACTUAL	Q	% COND	OB/XF MKT VALUE	NOTES
1	0810	CONCRETE A	0	100	80	4	320.00	SF	6.50	6.50	100	1999	1999	3	75	1,560	
2	0810	CONCRETE A	0	100	0	0	1,898.00	SF	6.50	6.50	100	1999	1999	3	75	9,253	
3	0500	FP-PRE FAB	0	100	0	0	1.00	UT	3,500.00	3,500.00	100	1999	1999	3	81	2,835	

LAND DESCRIPTION

TOTAL OB/XF 13,648

L N	USE CODE	CLS	LAND USE DESCRIPTION	CAP	R D	LOC ZONE	FRONT	DEPTH	TOT LND UTS	UNIT TYPE	D T	DPTH FACT	% COND	TOT ADJ	UNIT PRICE	ADJ UNIT PRICE	LAND VALUE	OTHER ADJUSTMENTS AND NOTES	YEAR	DENSITY	DECL	FRZ	YR	CONSRV
1	000100	C	RES	100		RSF-1	0.00	0.00	1.00	LT		1.00	1.00	1.00	125,000.00	125,000.00	125,000							

REVIEW DATE 11/22/2019 BY KWA Total Acres: 0.00 Total Land Value: 125,000 Market: 0 Agricultural: 0 Common: 125,000 PRINTED 07/30/2025 BY SYS