LOT 2
IN OR 928/316
LANCEFORD OAKS PB 5/145

VONNOH JOHN W JR & HALEY S
96118 OSPREY POINT LANE
FERNANDINA BEACH, FL 32034

2025

46-3N-28-5100-0002-0000

NASSAU COUNTY PROPERTY

BUILDING CHARACTERISTICS

ELEMENT	CD	CONSTRUCTION
Exterior Wall	20	FACE BRICK 100
Roof Structur	08	IRREGULAR 100
Roof Cover	03	COMP SHNGL 100
Interior Wall	05	DRYWALL 100
Interior Floo	14	CARPET 60
Interior Floo	12	HARDWOOD 40
Air Condition	03	CENTRAL 100
Heating Type	04	AIR DUCTED 100
Bedrooms		4 100
Bathrooms		3 100
Frame	02	WOOD FRAME 100
Stories	0	0 100
Units		0 100
Occupancy	00	NONE 100
Quality	04	Quality Level 04

DOR CODE 0100 SINGLE FAMILY
MAP NUM | MKT AREA 04
NEIGHBORHOOD/LOC 4020.00

AREA TYPE	TOTAL GROSS AREA	PCT OF BASE	YEAR	TOT ADJ AREA	SUBAREA MARKET VALUE
BAS	1,254	100	2001	1,254	148,192
FGR	738	55	2001	406	47,979
FOP	12	30	2001	4	473
FSP	160	40	2001	64	7,563
FUS	1,574	100	2001	1,574	186,008
PTO	24	5	2001	1	118
TOTALS	3,762			3,303	390,333

MARKET ADJUSTMENTS

TYPE	MDL	EFF. AREA	TOT ADJ PTS	EFF. BASE RATE	REPL. COST NEW	AYB	EYB	ECON	FNCT		NORM	% COND
0900	01	3,303	108.1920	142.81	471,701	2001	2001	0	0	0	17.25	82.75

1 SNGL FAM – 100% - 2002 Heated Area: 2828 HX Base Yr 2002

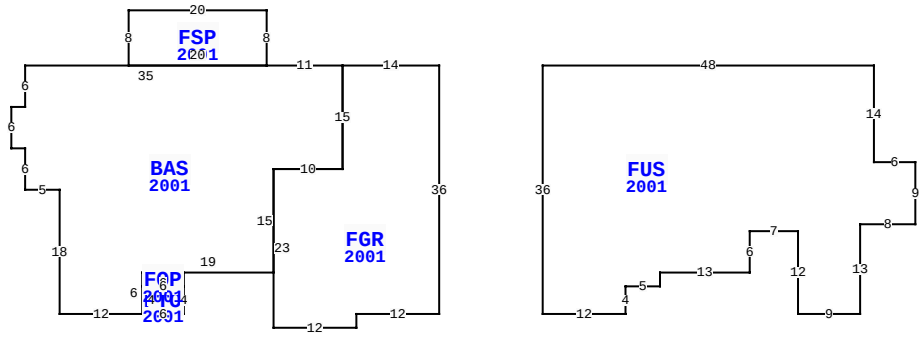

BLD DATE	
XF DATE	
INC DATE	
LGL DATE	
LAND DATE	05/07/2025 MLU
AG DATE	

96118 OSPREY POINT LN, FERNANDINA BEACH

VALUATION SUMMARY

VALUATION BY		STANDARD
Tax Group: 4	Tax Dist:	
BUILDING MARKET VALUE		390,333
TOTAL MARKET OB/XF VALUE		9,788
TOTAL LAND VALUE - MARKET		129,000
TOTAL MARKET VALUE		529,121
SOH/AGL Deduction		213,383
ASSESSED VALUE		315,738
TOTAL EXEMPTION VALUE	HX HB	50,722
BASE TAXABLE VALUE		265,016
TOTAL JUST VALUE		529,121
NCON VALUE		0
INCOME VALUE		
PREVIOUS YEAR MKT VALUE		486,102

PERMIT NUM	DESCRIPTION	AMT	ISSUED
B007606	NEW CONSTR	200,000	10/09/2000

SALES DATA

OFF RECORD Number	DATE	TYPE INST	Q U	V I	RSN CD	SALE PRICE
0928/0316	4/12/2000	WD	Q	V	01	100
GRANTOR: VONNOH JOHN W JR & HA						
GRANTEE: VONNOH JOHN W JR &						
0754/1621	3/22/1996	WD	Q	V		27,500
GRANTOR: JONES CHARLES R & BET						
GRANTEE: VONNOH JOHN W JR						

BUILDING NOTES

BUILDING DIMENSIONS

FGR=[YR=2001] W14BAS=[YR=2001] W11 FSP=[YR=2001] N8 W20 S8 E20$ W35 S6 W2 S6 E2 S6 E5 S18E12PTO=[YR=2001] E6 N4 FOP=[YR=2001] N2 W6 S2 E6 $W6 S4$N6 E19 N15 E10N15$S15 W10 S23 E12 N2 E12 N36$ PTR=E15 FUS=[YR=2001] E48 S14 E6 S9 W8 S13 W9 N12 W7 S6 W13 S2 W5 S4 W12 N36$ W15$.

EXTRA FEATURES

LN	OB/XF CODE	DESCRIPTION	BLD	CAP	L	W	UNITS	UT	Adj R	ADJ UNIT PRICE	ORIG COND	YEAR ON	YEAR ACTUAL	Q	% COND	OB/XF MKT VALUE	NOTES
1	0500	FP-PRE FAB	0	100	0	0	1.00	UT	3,500.00	3,500.00	100	2001	2001	3	84	2,940	
2	0812	CONCRETE C	0	100	0	0	2,167.00	SF	4.00	4.00	100	2001	2001	3	79	6,848	

LAND DESCRIPTION

TOTAL OB/XF 9,788

LN	USE CODE	CLS	LAND USE DESCRIPTION	CAP	RD	LOC ZONE	FRONT	DEPTH	TOT LND UTS	UNIT TYPE	DT	DPTH FACT	% COND	TOT ADJ	UNIT PRICE	ADJ UNIT PRICE	LAND VALUE	OTHER ADJUSTMENTS AND NOTES	YEAR	DENSITY	DECL	FRZ	YR	CONSRV
1	000100	C	RES	100		RSF-1	0.00	0.00	1.29	AC		1.00	1.00	1.00	100,000.00	100,000.00	129,000							

REVIEW DATE 05/12/2019 BY KBA Total Acres: 1.29 Total Land Value: 129,000 Market: 0 Agricultural: 0 Common: 129,000 PRINTED 07/30/2025 BY SYS