LOT 29
LANCEFORD CREEK PLANTATION
PB 5/110-111

LYON BRANDON S & HEATHER R
96084 LANCEFORD LN
FERNANDINA BEACH, FL 32034

2025

46-3N-28-5100-0029-0000

NASSAU COUNTY PROPERTY

BUILDING CHARACTERISTICS

ELEMENT	CD	CONSTRUCTION
Exterior Wall	31	HARDIE BRD 90
Exterior Wall	21	STONE 10
Roof Structur	08	IRREGULAR 100
Roof Cover	03	COMP SHNGL 100
Interior Wall	05	DRYWALL 100
Interior Floo	14	CARPET 60
Interior Floo	11	CLAY TILE 40
Air Condition	03	CENTRAL 100
Heating Type	04	AIR DUCTED 100
Bedrooms		5 100
Bathrooms		3.5 100
Frame	02	WOOD FRAME 100
Stories	2.	2. 100
Units		0 100
Occupancy	00	NONE 100
Quality	04	Quality Level 04
DOR CODE	0100	SINGLE FAMILY
MAP NUM		MKT AREA 04
NEIGHBORHOOD/LOC	4080.00	

AREA TYPE	TOTAL GROSS AREA	PCT OF BASE	YEAR	TOT ADJ AREA	SUBAREA MARKET VALUE
BAS	2,105	100	2006	2,105	333,703
FGR	612	55	2006	337	53,424
FOP	312	30	2006	94	14,902
FOP	548	30	2006	164	25,998
FUS	1,081	100	2006	1,081	171,369
STR	56	10	2019	6	951
TOTALS	4,714			3,787	600,347

MARKET ADJUSTMENTS

TYPE	MDL	EFF. AREA	TOT ADJ PTS	EFF. BASE RATE	REPL. COST NEW	AYB	EYB	ECON	FNCT		NORM	% COND
0500	01	3,787	109.7145	173.35	656,476	2006	2006	0	0	0	8.55	91.45

1 SFR CUST – 0% - 2025 Heated Area: 3186 HX Base Yr

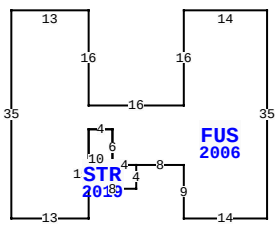

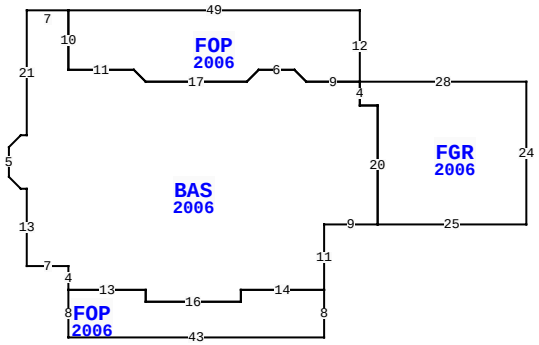

96084 LANCEFORD LN, FERNANDINA BEACH

BLD DATE		LGL DATE	
XF DATE		LAND DATE	05/08/2025 MLU
INC DATE		AG DATE	

VALUATION SUMMARY

VALUATION BY	STANDARD
Tax Group: 4	Tax Dist:
BUILDING MARKET VALUE	600,347
TOTAL MARKET OB/XF VALUE	48,438
TOTAL LAND VALUE - MARKET	142,500
TOTAL MARKET VALUE	791,285
SOH/AGL Deduction	0
ASSESSED VALUE	791,285
TOTAL EXEMPTION VALUE	0
BASE TAXABLE VALUE	791,285
TOTAL JUST VALUE	791,285
NCON VALUE	0
INCOME VALUE	
PREVIOUS YEAR MKT VALUE	779,680

PERMIT NUM	DESCRIPTION	AMT	ISSUED
M1701862	H/AC	0	03/01/2017
B18127	SCRN RM	10,000	10/31/2006
B17443	SWIM POOL	25,000	03/01/2006
WE00442	OTHER	0	02/01/2006
E16340	ELEC OTHER	9,000	12/01/2005
C16680	CO ISSUED	450,000	11/01/2005

SALES DATA

OFF RECORD Number	DATE	TYPE INST	Q / U	V / I	RSN CD	SALE PRICE
2694/1705	2/15/2024	WD	Q	I	01	950,000
GRANTOR: WIENBARG FRED W JR &						
GRANTEE: LYON BRANDON S & HE						
1829/1751	11/30/2012	WD	Q	I	02	450,000
GRANTOR: BEASLEY TIMOTHY C & G						
GRANTEE: WIENBARG FRED W JR						

BUILDING NOTES

EXTRA FEATURES

LN	OB/XF CODE	DESCRIPTION	BLD	CAP	L	W	UNITS	UT	Adj R	ADJ UNIT PRICE	ORIG COND	YEAR ON	YEAR ACTUAL	Q	% COND	OB/XF MKT VALUE	NOTES
1	0812	CONCRETE C	0	0	0	0	2,518.00	SF	4.00	4.00	100	2006	2006	3	86	8,662	
2	0861	POOL GUNIT	0	0	0	0	462.00	SF	85.00	85.00	100	2006	2006	3	40	15,708	
3	0911	SCRN RM A	0	0	0	0	1,426.00	SF	17.50	17.50	100	2006	2006	3	24	5,989	
4	0845	KOOL DECK	0	0	0	0	974.00	SF	7.25	7.25	100	2006	2006	3	86	6,073	
5	1123	CB 8"	0	0	0	0	186.00	SF	6.15	6.15	100	2006	2006	3	86	984	
6	0462	ST/AL FNC	0	0	350	0	1,400.00	SF	10.00	10.00	100	2015	2015	3	75	10,500	
7	0463	FENCE GATE	0	0	0	0	2.00	UT	300.00	300.00	100	2015	2015	3	87	522	

BUILDING DIMENSIONS

BAS=[YR=2006] W7 S21 W1 D2 L2 S5 D2 R2 E1 S13 E7 S4
FOP=[YR=2006] S8 E43 N8 W14 S2 W16 N2 W13 $ E13 S2 E16 N2
E14 N11 E9 FGR=[YR=2006] E25 N24 W28 S4 E3 S20 $ N20 W3 N4
FOP=[YR=2006] N12 W49 S10 E11 D2 R2 E17 U2 R2 E6 D2 R2
E9 $ W9 U2 L2 W6 D2 L2 W17 U2 L2 W11 N10 $ PTR= W75
FUS=[YR=2006] E13 S16 E16 N16 E14 S35 W14 N9 W8
STR=[YR=2019] S4 W8 N10 E4 S6 E4$ W4 N6 W4 S15 W13 N35 $ E75
$.

LAND DESCRIPTION

TOTAL OB/XF 48,438

LN	USE CODE	CLS	LAND USE DESCRIPTION	CAP	RD	LOC ZONE	FRONT	DEPTH	TOT LND UTS	UNIT TYPE	DT	DPTH FACT	% COND	TOT ADJ	UNIT PRICE	ADJ UNIT PRICE	LAND VALUE	OTHER ADJUSTMENTS AND NOTES	YEAR	DENSITY	DECL	FRZ	YR	CONSRV
1	000134	C	RES POND	0		RSF-1	0.00	0.00	1.00	LT		1.00	1.00	1.00	142,500.00	142,500.00	142,500							

REVIEW DATE 11/26/2019 BY KWA Total Acres: 0.00 Total Land Value: 142,500 Market: 0 Agricultural: 0 Common: 142,500 PRINTED 07/30/2025 BY SYS