LOT 22
LANCEFORD CREEK PLANTATION
PB 5/110-111

HOUSEHOLDER JEFFRY & PAULA PAULK L/E/
96171 LANCEFORD LN
FERNANDINA BEACH, FL 32034

2025

46-3N-28-5100-0022-0000

BUILDING CHARACTERISTICS

ELEMENT	CD	CONSTRUCTION
Exterior Wall	16	WD FR STUC 100
Roof Structur	08	IRREGULAR 100
Roof Cover	03	COMP SHNGL 100
Interior Wall	05	DRYWALL 100
Interior Floo	12	HARDWOOD 60
Interior Floo	14	CARPET 40
Air Condition	03	CENTRAL 100
Heating Type	04	AIR DUCTED 100
Bedrooms		5 100
Bathrooms		5.5 100
Frame	02	WOOD FRAME 100
Stories	2.	2. 100
Units		0 100
Quality	04	Quality Level 04
DOR CODE	0100	SINGLE FAMILY
MAP NUM		MKT AREA 04
NEIGHBORHOOD/LOC	4080.00	

AREA TYPE	TOTAL GROSS AREA	PCT OF BASE	YEAR	TOT ADJ AREA	SUBAREA MARKET VALUE
BAS	2,683	100	2004	2,683	550,190
FGR	748	55	2004	411	84,281
FOP	166	30	2004	50	10,254
FSP	155	40	2004	62	12,714
FSP	179	40	2004	72	14,765
FSP	757	40	2025	303	62,135
FUS	1,548	100	2004	1,548	317,441
STP	42	10	2025	4	820
STP	46	10	2025	5	1,025
UOP	507	20	2025	101	20,712
TOTALS	6,831			5,239	1,074,335

MARKET ADJUSTMENTS

TYPE	MDL	EFF. AREA	TOT ADJ PTS	EFF. BASE RATE	REPL. COST NEW	AYB	EYB	ECON	FNCT		NORM	% COND
0500	11	5,239	144.2100	227.85	1,193,706	2004	2004	0	0	0	10.00	90.00

1 SFR CUST – 0% - 0 Heated Area: 4231 HX Base Yr

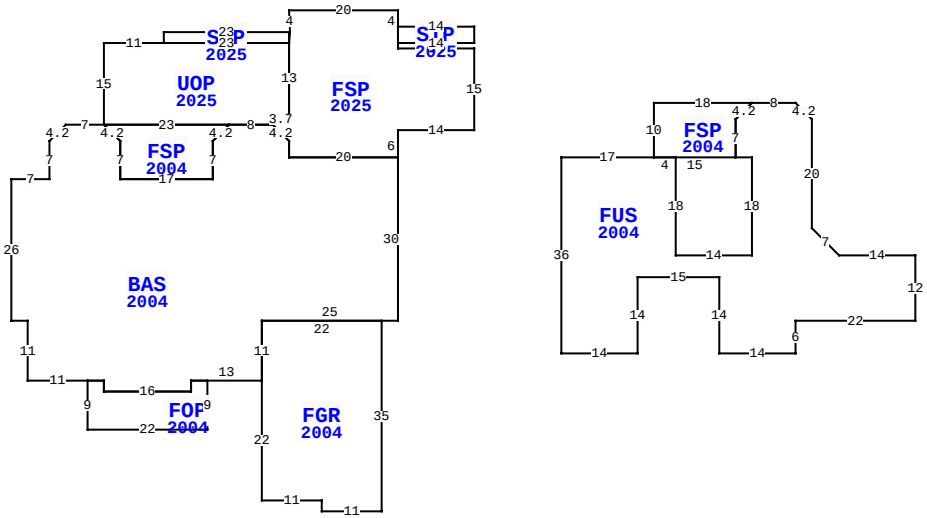

96171 LANCEFORD LN, FERNANDINA BEACH

BLD DATE		LGL DATE	
XF DATE		LAND DATE	
INC DATE		AG DATE	

NASSAU COUNTY PROPERTY

PAGE 1 of 2 4

VALUATION SUMMARY

VALUATION BY	STANDARD
Tax Group: 4	Tax Dist:
BUILDING MARKET VALUE	1,074,335
TOTAL MARKET OB/XF VALUE	129,431
TOTAL LAND VALUE - MARKET	325,000
TOTAL MARKET VALUE	1,528,766
SOH/AGL Deduction	248,471
ASSESSED VALUE	1,280,295
TOTAL EXEMPTION VALUE	0
BASE TAXABLE VALUE	1,280,295
TOTAL JUST VALUE	1,528,766
NCON VALUE	188,422
INCOME VALUE	
PREVIOUS YEAR MKT VALUE	1,315,114

PERMIT NUM	DESCRIPTION	AMT	ISSUED
22004741	ADDITION	488,244	03/28/2022
B25279	R/R	4,390	11/01/2011
B24225	ADDITION	6,669	12/01/2010
B24078	ADDITION	20,000	11/01/2010

SALES DATA

OFF RECORD Number	DATE	TYPE INST	Q / U	V / I	RSN CD	SALE PRICE
2593/0461	9/27/2022	LE	U	I	11	100
GRANTOR: HOUSEHOLDER JEFFRY M						
GRANTEE: RUTHVEN SUZANNE L &						
2115/1017	4/21/2017	WD	Q	I	01	814,400
GRANTOR: *CONFIDENTIAL*						
GRANTEE: HOUSEHOLDER JEFFRY						

BUILDING NOTES

EXTRA FEATURES

LN	OB/XF CODE	DESCRIPTION	BLD	CAP	L	W	UNITS	UT	Adj R	ADJ UNIT PRICE	ORIG COND	YEAR ON	YEAR ACTUAL	Q	% COND	OB/XF MKT VALUE	NOTES
1	0500	FP-PRE FAB	0	0	0	0	1.00	UT	3,500.00	3,500.00	100	2004	2004	3	87	3,045	
2	0812	CONCRETE C	0	0	0	0	2,561.00	SF	4.00	4.00	100	2004	2004	3	83	8,503	
3	1126	CB/STC 8"	0	0	0	0	45.00	SF	8.00	8.00	100	2004	2004	3	83	299	
4	0463	FENCE GATE	0	0	0	0	1.00	UT	300.00	300.00	100	2004	2004	3	61	183	
5	0462	ST/AL FNC	0	0	0	0	1,196.00	SF	10.00	10.00	100	2004	2004	3	32	3,827	
6	0300	BOAT DCK W	0	0	420	5	2,250.00	SF	40.00	40.00	100	2008	2008	3	48	43,200	
7	0303	FLT DOCK W	0	0	20	10	200.00	SF	26.00	26.00	100	2005	2005	3	36	1,872	
8	0310	AL GANG WY	0	0	0	0	20.00	LF	115.00	115.00	100	2005	2005	3	22	506	
9	0322	BOAT LFT L	0	0	0	0	1.00	UT	1,500.00	1,500.00	100	2005	2005	3	22	330	
10	0350	CARPORT WD	0	0	15	9	135.00	SF	13.00	13.00	100	2005	2005	3	22	386	

TOTAL OB/XF 62,151

BUILDING DIMENSIONS

BAS=[YR=2004;ORIG=0,0] W20 N3 U3L3 W8 D3L3 S7 W17 N7 U3L3 W7 D3L3 S7 W7 S26 E3 S11 E11 E3 S2 E16 N2 E13 N11 E25 N30 $
FUS=[YR=2004;ORIG=30,0] E17 E4 S18 E14 N18 W3 N7 U3R3 E8 D3R3 S20 D5R5 E14 S12 W22 S6 W14 N14 W15 S14 W14 N36 $
FGR=[YR=2004;ORIG=-25,41] S22 E11 S2 E11 N35 W22 S11 $
FSP=[YR=2004;ORIG=-31,-6] W23 D3R3 S7 E17 N7 U3R3 $
FOP=[YR=2004;ORIG=-57,41] S9 E22 N9 W3 S2 W16 N2 W3 $
FSP=[YR=2004;ORIG=47,0] N10 E18 D3L3 S7 W15 $
PTR=[ORIG=0,0] E30 W30 $
FSP=[YR=2025;ORIG=0,0] W20 N3 U3L3 U2R3 N13 U2R0.2 U4L0.2 E20 S4 S3 E14 S15 W14 S6 $
STP=[YR=2025;ORIG=0,-24] E14 S3 W14 N3 $

LAND DESCRIPTION

LN	USE CODE	CLS	LAND USE DESCRIPTION	CAP	RD	LOC ZONE	FRONT	DEPTH	TOT LND UTS	UNIT TYPE	DT	DPTH FACT	% COND	TOT ADJ	UNIT PRICE	ADJ UNIT PRICE	LAND VALUE	OTHER ADJUSTMENTS AND NOTES	YEAR	DENSITY	DECL	FRZ	YR	CONSRV
1	000131	C	RES CREEK	0		RSF-1	0.00	0.00	1.00	LT		1.00	1.00	1.00	325,000.00	325,000.00	325,000							

REVIEW DATE 09/10/2024 BY DJ Total Acres: 0.00 Total Land Value: 325,000 Market: 0 Agricultural: 0 Common: 325,000 PRINTED 07/30/2025 BY SYS

LOT 22
LANCEFORD CREEK PLANTATION
PB 5/110-111

HOUSEHOLDER JEFFRY & PAULA PAULK L/E/
96171 LANCEFORD LN
FERNANDINA BEACH, FL 32034

2025

46-3N-28-5100-0022-0000

NASSAU COUNTY PROPERTY

BUILDING CHARACTERISTICS

ELEMENT	CD	CONSTRUCTION

DOR CODE	0100	SINGLE FAMILY	
MAP NUM		MKT AREA	04
NEIGHBORHOOD/LOC	4080.00		

AREA TYPE	TOTAL GROSS AREA	PCT OF BASE	YEAR	TOT ADJ AREA	SUBAREA MARKET VALUE
TOTALS					

MARKET ADJUSTMENTS

TYPE	MDL	EFF. AREA	TOT ADJ PTS	EFF. BASE RATE	REPL. COST NEW	AYB	EYB	ECON	FNCT		NORM	% COND

VALUATION SUMMARY

VALUATION BY	STANDARD
Tax Group: 4	Tax Dist:
BUILDING MARKET VALUE	1,074,335
TOTAL MARKET OB/XF VALUE	129,431
TOTAL LAND VALUE - MARKET	325,000
TOTAL MARKET VALUE	1,528,766
SOH/AGL Deduction	248,471
ASSESSED VALUE	1,280,295
TOTAL EXEMPTION VALUE	0
BASE TAXABLE VALUE	1,280,295
TOTAL JUST VALUE	1,528,766
NCON VALUE	188,422
INCOME VALUE	
PREVIOUS YEAR MKT VALUE	1,315,114

PERMIT NUM	DESCRIPTION	AMT	ISSUED

SALES DATA

OFF RECORD Number	DATE	TYPE INST	Q / U	V / I	RSN CD	SALE PRICE
2593/0461	9/27/2022	LE	U	I	11	100
GRANTOR: HOUSEHOLDER JEFFRY M						
GRANTEE: RUTHVEN SUZANNE L &						
2115/1017	4/21/2017	WD	Q	I	01	814,400
GRANTOR: *CONFIDENTIAL*						
GRANTEE: HOUSEHOLDER JEFFRY						

BLD DATE		LGL DATE	
XF DATE		LAND DATE	
INC DATE		AG DATE	

BUILDING NOTES

BUILDING DIMENSIONS

EXTRA FEATURES

LN	OB/XF CODE	DESCRIPTION	BLD	CAP	L	W	UNITS	UT	Adj R	ADJ UNIT PRICE	ORIG COND	YEAR ON	YEAR ACTUAL	Q	% COND	OB/XF MKT VALUE	NOTES
11	0855	CONC PAVER	0	0	0	0	935.00	SF	10.00	10.00	100	2011	2011	3	91	8,509	
12	0911	SCRN RM A	0	0	15	23	345.00	SF	17.50	17.50	100	2011	2011	3	45	2,717	
13	0317	DCK PLNG W	0	0	0	0	2.00	UT	1,000.00	1,000.00	100	2005	2005	3	22	440	
14	0920	CWALL-WD/M	0	0	0	0	136.00	LF	390.00	390.00	100	2024	2020		86	45,614	
15	0501	FP-AVERAGE	0	0	0	0	1.00	UT	5,000.00	5,000.00	100	2025	2024		100	5,000	
16	0600	SUMMER KIT	0	0	0	0	1.00	UT	5,000.00	5,000.00	100	2025	2024		100	5,000	

LAND DESCRIPTION

TOTAL OB/XF 67,280

LN	USE CODE	CLS	LAND USE DESCRIPTION	CAP	RD	LOC ZONE	FRONT	DEPTH	TOT LND UTS	UNIT TYPE	DT	DPTH FACT	% COND	TOT ADJ	UNIT PRICE	ADJ UNIT PRICE	LAND VALUE	OTHER ADJUSTMENTS AND NOTES	YEAR	DENSITY	DECL	FRZ	YR	CONSRV

REVIEW DATE 09/10/2024 BY DJ Total Acres: 0.00 Total Land Value: 325,000 Market: 0 Agricultural: 0 Common: 325,000 PRINTED 07/30/2025 BY SYS