LOT 30
IN OR 2192/775
ESMT PT OR 1028/831

EVERSOLE BRETT A & AMANDA M
96046 HIGH POINTE DR
FERNANDINA BEACH, FL 32034

2025

46-3N-28-509H-0030-0000

BUILDING CHARACTERISTICS

ELEMENT	CD	CONSTRUCTION
Exterior Wall	31	HARDIE BRD 60
Exterior Wall	20	FACE BRICK 40
Roof Structur	08	IRREGULAR 100
Roof Cover	03	COMP SHNGL 100
Interior Wall	05	DRYWALL 100
Interior Floo	12	HARDWOOD 60
Interior Floo	11	CLAY TILE 40
Air Condition	03	CENTRAL 100
Heating Type	04	AIR DUCTED 100
Bedrooms		5 100
Bathrooms		5.5 100
Frame	02	WOOD FRAME 100
Stories	2.	2. 100
Units		0 100
Occupancy	00	NONE 100
Quality	05	Quality Level 05
DOR CODE	0100	SINGLE FAMILY
MAP NUM		MKT AREA 04
NEIGHBORHOOD/LOC	4022.00	

AREA TYPE	TOTAL GROSS AREA	PCT OF BASE	YEAR	TOT ADJ AREA	SUBAREA MARKET VALUE
APT	567	100	2005	567	90,407
BAS	2,162	100	2005	2,162	344,727
FGR	333	55	2005	183	29,179
FGR	618	55	2005	340	54,212
FOP	371	30	2005	111	17,699
FOP	761	30	2005	228	36,354
FUS	1,249	100	2005	1,249	199,151
STP	35	10	2005	4	638
TOTALS	6,096			4,844	772,367

MARKET ADJUSTMENTS

TYPE	MDL	EFF. AREA	TOT ADJ PTS	EFF. BASE RATE	REPL. COST NEW	AYB	EYB	ECON	FNCT		NORM	% COND
0500	01	4,844	113.7092	179.66	870,273	2005	2005	0	0	0	11.25	88.75

1 SFR CUST – 100% - 2019 Heated Area: 3978 HX Base Yr 2019

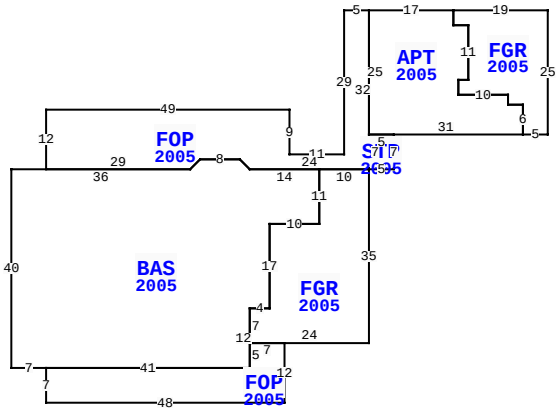

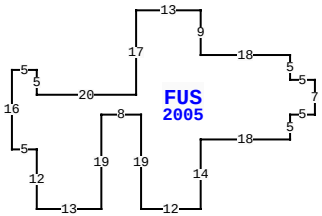

96046 HIGH POINTE DR, FERNANDINA BEACH

BLD DATE		LGL DATE	
XF DATE		LAND DATE	04/03/2024 MLU
INC DATE		AG DATE	

NASSAU COUNTY PROPERTY

PAGE 1 of 1 4

VALUATION SUMMARY

VALUATION BY		STANDARD
Tax Group: 4	Tax Dist:	
BUILDING MARKET VALUE		772,367
TOTAL MARKET OB/XF VALUE		67,961
TOTAL LAND VALUE - MARKET		130,000
TOTAL MARKET VALUE		970,328
SOH/AGL Deduction		333,099
ASSESSED VALUE		637,229
TOTAL EXEMPTION VALUE	HX HB	50,722
BASE TAXABLE VALUE		586,507
TOTAL JUST VALUE		970,328
NCON VALUE		0
INCOME VALUE		
PREVIOUS YEAR MKT VALUE		941,799

PERMIT NUM	DESCRIPTION	AMT	ISSUED
B0822075	SWIM POOL	40,000	11/19/2008
M0509904	H/AC	0	06/01/2005
P09150	OTHER	0	03/01/2005
B14486	NEW CONSTR	410,000	02/01/2005
E14429	ELEC OTHER	2,400	02/01/2005
R07167	REPAIR/RRF	3,500	02/01/2005

SALES DATA

OFF RECORD Number	DATE	TYPE INST	Q / U	V / I	RSN CD	SALE PRICE
2192/0775	4/25/2018	WD	Q	I	01	685,000
GRANTOR: SWIFT BETTE J & RANDY						
GRANTEE: EVERSOLE BRETT A &						
1863/1286	6/17/2013	WD	Q	I	02	620,000
GRANTOR: BECKHAM WALTER M II &						
GRANTEE: SWIFT BETTE J & RAN						

BUILDING NOTES

BUILDING DIMENSIONS

FGR=[YR=2005] E5N25W19S3E3S11W2S3E10 S2E3S6$ APT=[YR=2005] N6W3N2W10N3E2 N11W3N3W17 FOP=[YR=2005] W5S29W11N9 W49S12E29 U2 R2 E8 D2 R2 E24 FGR=[YR=2005] W10 BAS=[YR=2005] W14 U2 L2 W8 D2 L2 W36S40E7 FOP=[YR=2005] S7E48 N12W7S5W41$E41N12E4N17E10N11$ S11W10S17W4S7E24N35$ STP=[YR=2005] E5N7W5S7$N32$S25E31$ PTR=S80 W30 FUS=[YR=2005] W5N5W18N9W13S17W20 N5W5S16E5S12E13N19E8S19E12N14 E18 N5E5N7$ E30 N80$.

EXTRA FEATURES

LN	OB/XF CODE	DESCRIPTION	BLD	CAP	L	W	UNITS	UT	Adj R	ADJ UNIT PRICE	ORIG COND	YEAR ON	YEAR ACTUAL	Q	% COND	OB/XF MKT VALUE	NOTES
1	0504	FP-ELECTRI	0	100	0	0	1.00	UT	2,000.00	2,000.00	100	2005	2005	3	88	1,760	
2	0855	CONC PAVER	0	100	151	1	151.00	SF	7.00	7.00	100	2005	2005	3	84	888	
3	0812	CONCRETE C	0	100	0	0	4,436.00	SF	4.00	4.00	100	2005	2005	3	84	14,905	
4	0861	POOL GUNIT	0	100	38	15	570.00	SF	85.00	85.00	100	2009	2009	3	52	25,194	
5	0855	CONC PAVER	0	100	0	0	1,315.00	SF	10.00	10.00	100	2009	2009	3	89	11,704	
6	0911	SCRN RM A	0	100	60	32	1,920.00	SF	17.50	17.50	100	2009	2009	3	35	11,760	
7	0600	SUMMER KIT	0	100	0	0	1.00	UT	5,000.00	5,000.00	100	2009	2009	3	35	1,750	

LAND DESCRIPTION

TOTAL OB/XF 67,961

LN	USE CODE	CLS	LAND USE DESCRIPTION	CAP	RD	LOC ZONE	FRONT	DEPTH	TOT LND UTS	UNIT TYPE	DT	DPTH FACT	% COND	TOT ADJ	UNIT PRICE	ADJ UNIT PRICE	LAND VALUE	OTHER ADJUSTMENTS AND NOTES	YEAR	DENSITY	DECL	FRZ	YR	CONSRV
1	000100	C	RES	100		RSF-1	0.00	0.00	1.00	LT		1.00	1.00	1.00	130,000.00	130,000.00	130,000							

REVIEW DATE 01/11/2019 BY KW Total Acres: 0.00 Total Land Value: 130,000 Market: 0 Agricultural: 0 Common: 130,000 PRINTED 07/30/2025 BY SYS