LOT 10
IN OR 1405/234
HIGH POINTE PB 6/273

TONTI LOUIS G & JOYCE
96249 HIGH POINTE DRIVE
FERNANDINA BEACH, FL 32034

2025

46-3N-28-509H-0010-0000

BUILDING CHARACTERISTICS

ELEMENT	CD	CONSTRUCTION
Exterior Wall	16	WD FR STUC 100
Roof Structur	08	IRREGULAR 100
Roof Cover	03	COMP SHNGL 100
Interior Wall	05	DRYWALL 100
Interior Floo	11	CLAY TILE 50
Interior Floo	13	LVT/LAMNT 50
Air Condition	03	CENTRAL 100
Heating Type	04	AIR DUCTED 100
Bedrooms		4 100
Bathrooms		4 100
Frame	02	WOOD FRAME 100
Stories	1.5	1.5 100
Units		0 100
Occupancy	00	NONE 100
Quality	05	Quality Level 05
DOR CODE	0100	SINGLE FAMILY
MAP NUM		MKT AREA 04
NEIGHBORHOOD/LOC	4022.00	

AREA TYPE	TOTAL GROSS AREA	PCT OF BASE	YEAR	TOT ADJ AREA	SUBAREA MARKET VALUE
BAS	2,597	100	2003	2,597	444,130
FGR	484	55	2003	266	45,490
FOP	57	30	2003	17	2,907
FSP	213	40	2003	85	14,537
FUS	286	100	2007	286	48,911
UOP	24	20	2003	5	855
TOTALS	3,661			3,256	556,830

MARKET ADJUSTMENTS

TYPE	MDL	EFF. AREA	TOT ADJ PTS	EFF. BASE RATE	REPL. COST NEW	AYB	EYB	ECON	FNCT		NORM	% COND
0500	01	3,256	120.9340	191.08	622,156	2003	2003	0	0	0	10.50	89.50

1 SFR CUST – 100% - 2007 Heated Area: 2883 HX Base Yr 2007

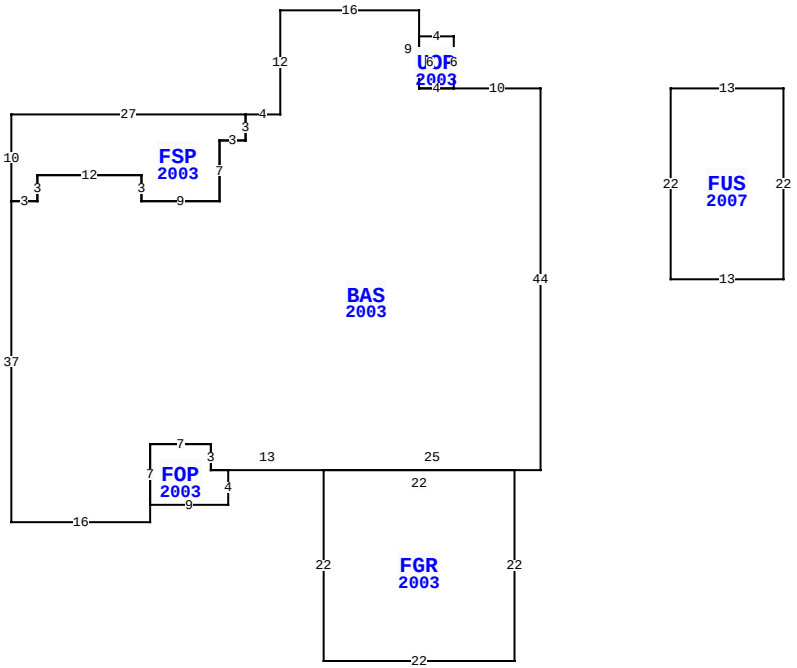

BLD DATE		LGL DATE	
XF DATE		LAND DATE	04/03/2024 MLU
INC DATE		AG DATE	

96249 HIGH POINTE DR, FERNANDINA BEACH

NASSAU COUNTY PROPERTY

PAGE 1 of 1 4

VALUATION SUMMARY

VALUATION BY		STANDARD
Tax Group: 4	Tax Dist:	
BUILDING MARKET VALUE		556,830
TOTAL MARKET OB/XF VALUE		7,127
TOTAL LAND VALUE - MARKET		130,000
TOTAL MARKET VALUE		693,957
SOH/AGL Deduction		365,765
ASSESSED VALUE		328,192
TOTAL EXEMPTION VALUE	HX HB	50,722
BASE TAXABLE VALUE		277,470
TOTAL JUST VALUE		693,957
NCON VALUE		0
INCOME VALUE		
PREVIOUS YEAR MKT VALUE		668,788

PERMIT NUM	DESCRIPTION	AMT	ISSUED
B0209897	NEW CONSTR	202,640	07/01/2002

SALES DATA

OFF RECORD Number	DATE	TYPE INST	Q U	V I	RSN CD	SALE PRICE
1405/0234	4/18/2006	WD	Q	I		490,000
GRANTOR: WALKER RONALD O & MIR						
GRANTEE: TONTI LOUIS G & JOY						
1250/0820	8/03/2004	WD	Q	I		400,000
GRANTOR: WILLIAMS E AUBREY TRU						
GRANTEE: WALKER RONALD O & M						

BUILDING NOTES

BUILDING DIMENSIONS

BAS=[YR=2003] W10 UOP=[YR=2003] N6 W4 S6 E4 $ W4 N9 W16 S12 W4 FSP=[YR=2003] W27 S10 E3 N3 E12 S3 E9 N7 E3 N3$ S3 W3 S7 W9 N3 W12 S3 W3 S37 E16 N2 FOP=[YR=2003] E9 N4 W2 N3 W7 S7 $ N7 E7 S3 E13 FGR=[YR=2003] S22 E22 N22 W22 $ E25 N44$ PTR= E15 FUS=[YR=2007] E13 S22 W13 N22 $ W15 $.

EXTRA FEATURES

LN	OB/XF CODE	DESCRIPTION	BLD	CAP	L	W	UNITS	UT	Adj R	ADJ UNIT PRICE	ORIG COND	YEAR ON	YEAR ACTUAL	Q	% COND	OB/XF MKT VALUE	NOTES
1	0812	CONCRETE C	0	100	0	0	2,173.00	SF	4.00	4.00	100	2003	2003	3	82	7,127	

TOTAL OB/XF 7,127

LAND DESCRIPTION

LN	USE CODE	CLS	LAND USE DESCRIPTION	CAP	RD	LOC ZONE	FRONT	DEPTH	TOT LND UTS	UNIT TYPE	DT	DPTH FACT	% COND	TOT ADJ	UNIT PRICE	ADJ UNIT PRICE	LAND VALUE	OTHER ADJUSTMENTS AND NOTES	YEAR	DENSITY	DECL	FRZ	YR	CONSRV
1	000100	C	RES	100		RSF-1	0.00	0.00	1.00	LT		1.00	1.00	1.00	130,000.00	130,000.00	130,000							

REVIEW DATE 01/19/2019 BY KW Total Acres: 0.00 Total Land Value: 130,000 Market: 0 Agricultural: 0 Common: 130,000 PRINTED 07/30/2025 BY SYS