LOT 6
IN OR 2011/1078
HIGH POINTE PB 6/273

LINDBERG JAMES R & KRISTEN M
96129 HIGH POINTE DRIVE
FERNANDINA BEACH, FL 32034

2025

46-3N-28-509H-0006-0000

NASSAU COUNTY PROPERTY

BUILDING CHARACTERISTICS

ELEMENT	CD	CONSTRUCTION
Exterior Wall	31	HARDIE BRD 100
Roof Structur	08	IRREGULAR 100
Roof Cover	03	COMP SHNGL 100
Interior Wall	05	DRYWALL 100
Interior Floo	12	HARDWOOD 80
Interior Floo	11	CLAY TILE 20
Air Condition	03	CENTRAL 100
Heating Type	04	AIR DUCTED 100
Bedrooms		3 100
Bathrooms		3.5 100
Frame	02	WOOD FRAME 100
Stories	1.5	1.5 100
Units		0 100
Occupancy	00	NONE 100
Quality	05	Quality Level 05
DOR CODE	0100	SINGLE FAMILY
MAP NUM		MKT AREA 04
NEIGHBORHOOD/LOC	4022.00	

AREA TYPE	TOTAL GROSS AREA	PCT OF BASE	YEAR	TOT ADJ AREA	SUBAREA MARKET VALUE
BAS	2,885	100	2017	2,885	499,048
FGR	738	55	2017	406	70,230
FOP	192	30	2017	58	10,033
FSP	557	40	2017	223	38,575
FUS	553	100	2017	553	95,658
PTO	56	5	2017	3	519
STP	36	10	2017	4	692
STP	154	10	2017	15	2,595
STR	64	10	2017	6	1,038
TOTALS	5,235			4,153	718,386

MARKET ADJUSTMENTS

TYPE	MDL	EFF. AREA	TOT ADJ PTS	EFF. BASE RATE	REPL. COST NEW	AYB	EYB	ECON	FNCT		NORM	% COND
0500	01	4,153	112.8688	178.33	740,604	2017	2017	0	0	0	3.00	97.00

1 SFR CUST – 100% - 2019 Heated Area: 3438 HX Base Yr 2019

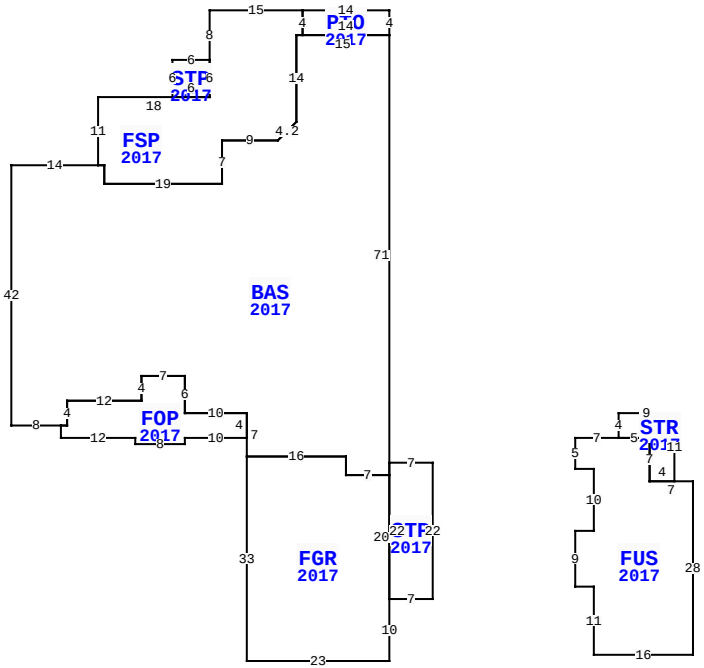

BLD DATE		LGL DATE	
XF DATE		LAND DATE	04/03/2024 MLU
INC DATE		AG DATE	

96129 HIGH POINTE DR, FERNANDINA BEACH

VALUATION SUMMARY

VALUATION BY		STANDARD
Tax Group: 4	Tax Dist:	
BUILDING MARKET VALUE		718,386
TOTAL MARKET OB/XF VALUE		27,377
TOTAL LAND VALUE - MARKET		130,000
TOTAL MARKET VALUE		875,763
SOH/AGL Deduction		344,109
ASSESSED VALUE		531,654
TOTAL EXEMPTION VALUE	HX HB	50,722
BASE TAXABLE VALUE		480,932
TOTAL JUST VALUE		875,763
NCON VALUE		0
INCOME VALUE		
PREVIOUS YEAR MKT VALUE		843,646

PERMIT NUM	DESCRIPTION	AMT	ISSUED
C1632242	CO ISSUED	0	05/12/2017
B1632242	NEW CONSTR	437,594	05/05/2016

SALES DATA

OFF RECORD Number	DATE	TYPE INST	Q / U	V / I	RSN CD	SALE PRICE
2011/1078	10/28/2015	WD	Q	V	01	82,000
GRANTOR: BURKE MARY BETH & NIC						
GRANTEE: LINDBERG JAMES R &						
1448/0564	9/28/2006	WD	Q	V		190,000
GRANTOR: DONNA LYNNE CUSTOM HO						
GRANTEE: BURKE MARY BETH & N						

BUILDING NOTES

BUILDING DIMENSIONS

PTO=[YR=2017] N4 W14 FSP=[YR=2017] W15 S8 STP=[YR=2017] W6 S6 E6 N6$ S6 W18 S11 BAS=[YR=2017] W14 S42 E8 FOP=[YR=2017] S2 E12 S1 E8 N1 E10 N4 W10 N6 W7 S4 W12 S4 W1$ E1 N4 E12 N4 E7 S6 E10 S7 FGR=[YR=2017] S33 E23 N10 STP=[YR=2017] E7 N22 W7 S22$ N20 W7 N3 W16$ E16 S3 E7 N71 W15 S14 D3 L3 W9 S7 W19 N3 W1$ E1 S3 E19 N7 E9 U3 R3 N14 E1 N4$ S4 E14$ PTR= S65 E30 FUS=[YR=2017] E7 STR=[YR=2017] N4 E9 S11 W4 N7 W5$ E5 S7 E7 S28 W16 N11 W3 N9 E3 N10 W3 N5$ W30 N65$.

EXTRA FEATURES

LN	OB/XF CODE	DESCRIPTION	BLD	CAP	L	W	UNITS	UT	Adj R	ADJ UNIT PRICE	ORIG COND	YEAR ON	YEAR ACTUAL	Q	% COND	OB/XF MKT VALUE	NOTES
1	0500	FP-PRE FAB	0	100	0	0	1.00	UT	3,500.00	3,500.00	100	2017	2017	3	97	3,395	
2	0600	SUMMER KIT	0	100	0	0	1.00	UT	11,250.00	11,250.00	100	2017	2017	3	74	8,325	
3	0812	CONCRETE C	0	100	0	0	1,888.00	SF	4.00	4.00	100	2017	2017	3	96	7,250	
4	0462	ST/AL FNC	0	100	144	0	576.00	SF	10.00	10.00	100	2017	2017	3	81	4,666	
5	0463	FENCE GATE	0	100	0	0	2.00	UT	300.00	300.00	100	2017	2017	3	90	540	
6	0855	CONC PAVER	0	100	66	5	330.00	SF	10.00	10.00	100	2018	2018	3	97	3,201	

LAND DESCRIPTION

TOTAL OB/XF 27,377

LN	USE CODE	CLS	LAND USE DESCRIPTION	CAP	RD	LOC ZONE	FRONT	DEPTH	TOT LND UTS	UNIT TYPE	DT	DPTH FACT	% COND	TOT ADJ	UNIT PRICE	ADJ UNIT PRICE	LAND VALUE	OTHER ADJUSTMENTS AND NOTES	YEAR	DENSITY	DECL	FRZ	YR	CONSRV
1	000100	C	RES	100		RSF-1	0.00	0.00	1.00	LT		1.00	1.00	1.00	130,000.00	130,000.00	130,000							

REVIEW DATE 05/12/2019 BY KBA Total Acres: 0.00 Total Land Value: 130,000 Market: 0 Agricultural: 0 Common: 130,000 PRINTED 07/30/2025 BY SYS