LOT 4
IN OR 1995/1602
HIGH POINTE PB 6/273

CLEMENTS JOYCE H
96081 HIGH POINTE DR
FERNANDINA BEACH, FL 32034

2025

46-3N-28-509H-0004-0000

NASSAU COUNTY PROPERTY

BUILDING CHARACTERISTICS

ELEMENT	CD	CONSTRUCTION
Exterior Wall	20	FACE BRICK 100
Roof Structur	03	GABLE/HIP 100
Roof Cover	03	COMP SHNGL 100
Interior Wall	05	DRYWALL 90
Interior Wall	08	DECORATIVE 10
Interior Floo	19	MARBLE 70
Interior Floo	14	CARPET 30
Air Condition	03	CENTRAL 100
Heating Type	04	AIR DUCTED 100
Bedrooms		3 100
Bathrooms		3 100
Frame	02	WOOD FRAME 100
Stories	1.	1. 100
Units		0 100
Occupancy	00	NONE 100
Quality	05	Quality Level 05
DOR CODE	0100	SINGLE FAMILY
MAP NUM		MKT AREA 04
NEIGHBORHOOD/LOC	4022.00	

AREA TYPE	TOTAL GROSS AREA	PCT OF BASE	YEAR	TOT ADJ AREA	SUBAREA MARKET VALUE
BAS	2,486	100	2003	2,486	458,141
FGR	760	55	2003	418	77,032
FOP	72	30	2003	22	4,054
FOP	372	30	2003	112	20,640
STP	12	10	2003	1	185
STP	16	10	2003	2	368
TOTALS	3,718			3,041	560,421

MARKET ADJUSTMENTS

TYPE	MDL	EFF. AREA	TOT ADJ PTS	EFF. BASE RATE	REPL. COST NEW	AYB	EYB	ECON	FNCT		NORM	% COND
0500	01	3,041	138.4416	218.74	665,188	2003	2003	0	0	0	15.75	84.25

1 SFR CUST – 100% - 2016 Heated Area: 2486 HX Base Yr 2016

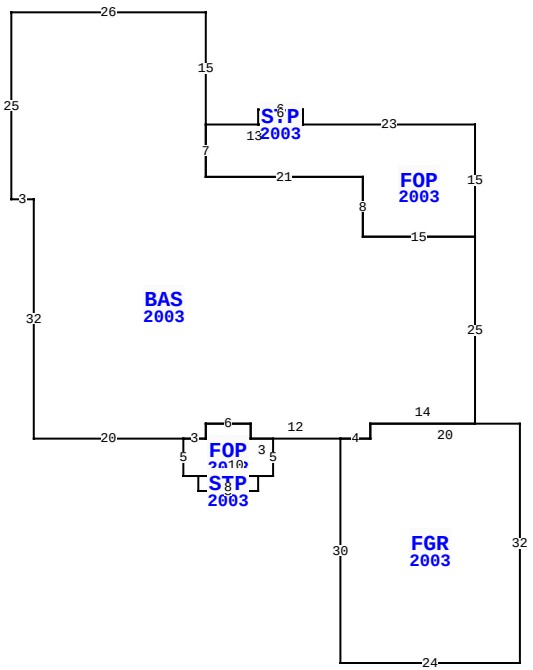

BLD DATE	
XF DATE	
INC DATE	
LGL DATE	
LAND DATE	04/03/2024 MLU
AG DATE	

96081 HIGH POINTE DR, FERNANDINA BEACH

VALUATION SUMMARY

VALUATION BY		STANDARD
Tax Group: 4	Tax Dist:	
BUILDING MARKET VALUE		560,421
TOTAL MARKET OB/XF VALUE		10,896
TOTAL LAND VALUE - MARKET		130,000
TOTAL MARKET VALUE		701,317
SOH/AGL Deduction		312,596
ASSESSED VALUE		388,721
TOTAL EXEMPTION VALUE	HX HB WX	55,722
BASE TAXABLE VALUE		332,999
TOTAL JUST VALUE		701,317
NCON VALUE		0
INCOME VALUE		
PREVIOUS YEAR MKT VALUE		677,799

PERMIT NUM	DESCRIPTION	AMT	ISSUED
P0363390	NEW CONSTR	183,220	06/02/2003

SALES DATA

OFF RECORD Number	DATE	TYPE INST	Q / U	V / I	RSN CD	SALE PRICE
1995/1602	8/03/2015	WD	Q	I	02	417,000
GRANTOR: BELL DONALD E & SUSAN						
GRANTEE: CLEMENTS JOYCE H						
1746/1447	6/29/2011	WD	U	I	14	100
GRANTOR: BELL DONALD E & SUSAN						
GRANTEE: BELL DONALD E & SUS						

BUILDING NOTES

EXTRA FEATURES

LN	OB/XF CODE	DESCRIPTION	BLD	CAP	L	W	UNITS	UT	Adj R	ADJ UNIT PRICE	ORIG COND	YEAR ON	YEAR ACTUAL	Q	% COND	OB/XF MKT VALUE	NOTES
1	0812	CONCRETE C	0	100	0	0	3,322.00	SF	4.00	4.00	100	2003	2003	3	82	10,896	

BUILDING DIMENSIONS

FOP=[YR=2003] W23 STP=[YR=2003] N2 W6 S2 E6$ W13
BAS=[YR=2003] N15 W26 S25 E3 S32 E20 FOP=[YR=2003] S5 E2
STP=[YR=2003] S2 E8 N2 W8$ E10 N5 W3 N2 W6 S2 W3$ E3 N2 E6
S2 E12 FGR=[YR=2003] S30 E24 N32 W20 S2 W4$ E4 N2 E14 N25 W15
N8 W21 N7$ S7 E21 S8 E15 N15$.

LAND DESCRIPTION

TOTAL OB/XF 10,896

LN	USE CODE	CLS	LAND USE DESCRIPTION	CAP	RD	LOC ZONE	FRONT	DEPTH	TOT LND UTS	UNIT TYPE	DT	DPTH FACT	% COND	TOT ADJ	UNIT PRICE	ADJ UNIT PRICE	LAND VALUE	OTHER ADJUSTMENTS AND NOTES	YEAR	DENSITY	DECL	FRZ	YR	CONSRV
1	000100	C	RES	100		RSF-1	0.00	0.00	1.00	LT		1.00	1.00	1.00	130,000.00	130,000.00	130,000							

REVIEW DATE 01/15/2019 BY KW Total Acres: 0.00 Total Land Value: 130,000 Market: 0 Agricultural: 0 Common: 130,000 PRINTED 07/30/2025 BY SYS