LOT 25
IN OR 2486/229
THE COVE @ OYSTER BAY PB 6/79

MILLER LIVING TRUST/MILLER GEORGE J TRUSTEE
96071 PARK PLACE
FERNANDINA BEACH, FL 32034

**2025**

**46-3N-28-5065-0025-0000**

## NASSAU COUNTY PROPERTY



## BUILDING CHARACTERISTICS

| ELEMENT | CD | CONSTRUCTION |
|---|---|---|
| Exterior Wall | 31 | HARDIE BRD 100 |
| Roof Structur | 08 | IRREGULAR 100 |
| Roof Cover | 12 | MODULAR MT 100 |
| Interior Wall | 05 | DRYWALL 100 |
| Interior Floo | 12 | HARDWOOD 50 |
| Interior Floo | 14 | CARPET 50 |
| Air Condition | 03 | CENTRAL 100 |
| Heating Type | 04 | AIR DUCTED 100 |
| Bedrooms | | 3 100 |
| Bathrooms | | 2.5 100 |
| Frame | 02 | WOOD FRAME 100 |
| Stories | 2. | 2. 100 |
| Units | | 0 100 |
| Occupancy | 00 | NONE 100 |
| Quality | 04 | Quality Level 04 |

DOR CODE 0100 SINGLE FAMILY
MAP NUM | MKT AREA 04
NEIGHBORHOOD/LOC 4024.00

| AREA TYPE | TOTAL GROSS AREA | PCT OF BASE | YEAR | TOT ADJ AREA | SUBAREA MARKET VALUE |
|---|---|---|---|---|---|
| BAL | 197 | 15 | 2006 | 30 | 4,868 |
| BAS | 1,423 | 100 | 2006 | 1,423 | 230,904 |
| FGR | 484 | 55 | 2006 | 266 | 43,163 |
| FOP | 210 | 30 | 2006 | 63 | 10,223 |
| FSP | 197 | 40 | 2010 | 79 | 12,819 |
| FUS | 1,276 | 100 | 2006 | 1,276 | 207,051 |
| STP | 18 | 10 | 2006 | 2 | 324 |
| UOP | 110 | 20 | 2010 | 22 | 3,570 |
| TOTALS | 3,915 | | | 3,161 | 512,922 |

## MARKET ADJUSTMENTS

| TYPE | MDL | EFF. AREA | TOT ADJ PTS | EFF. BASE RATE | REPL. COST NEW | AYB | EYB | ECON | FNCT | | NORM | % COND |
|---|---|---|---|---|---|---|---|---|---|---|---|---|
| 0500 | 01 | 3,161 | 108.6750 | 171.71 | 542,775 | 2006 | 2012 | 0 | 0 | 0 | 5.50 | 94.50 |

1 SFR CUST – 100% - 2022 Heated Area: 2699 HX Base Yr 2022

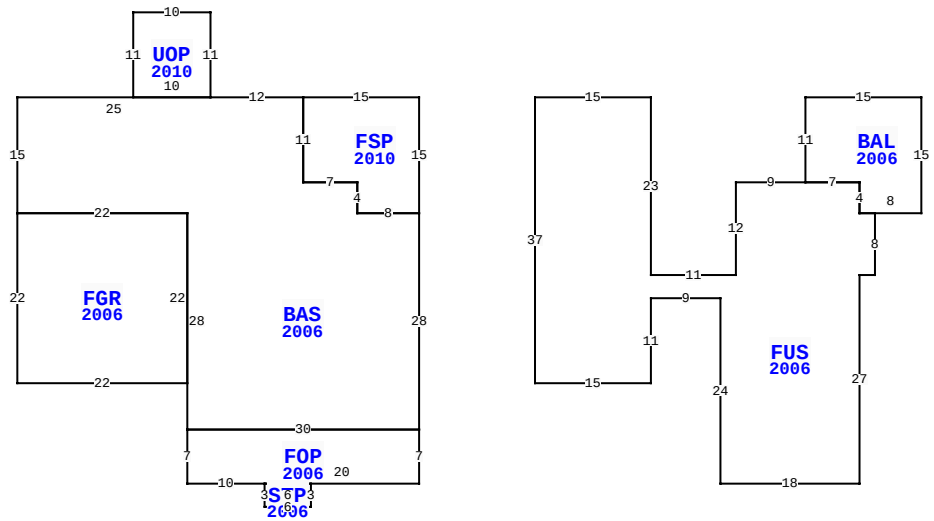


96071 PARK PL, FERNANDINA BEACH

| | | | |
|---|---|---|---|
| BLD DATE | | LGL DATE | |
| XF DATE | | LAND DATE | 05/08/2025 MLU |
| INC DATE | | AG DATE | |

## NASSAU COUNTY PROPERTY — VALUATION SUMMARY

| | | |
|---|---|---|
| VALUATION BY | | STANDARD |
| Tax Group: 4 | Tax Dist: | |
| BUILDING MARKET VALUE | | 512,922 |
| TOTAL MARKET OB/XF VALUE | | 25,951 |
| TOTAL LAND VALUE - MARKET | | 142,500 |
| TOTAL MARKET VALUE | | 681,373 |
| SOH/AGL Deduction | | 133,837 |
| ASSESSED VALUE | | 547,536 |
| TOTAL EXEMPTION VALUE | HX HB | 50,722 |
| BASE TAXABLE VALUE | | 496,814 |
| TOTAL JUST VALUE | | 681,373 |
| NCON VALUE | | 0 |
| INCOME VALUE | | |
| PREVIOUS YEAR MKT VALUE | | 656,209 |

| PERMIT NUM | DESCRIPTION | AMT | ISSUED |
|---|---|---|---|
| B23434 | ADDITION | 3,747 | 03/01/2010 |
| M10972 | MECH OTHER | 0 | 01/01/2006 |
| R08742 | REPAIR/RRF | 10,000 | 12/01/2005 |
| E15688 | ELEC OTHER | 3,000 | 09/01/2005 |
| P09985 | OTHER | 0 | 09/01/2005 |
| E15488 | ELEC OTHER | 0 | 08/01/2005 |

## SALES DATA

| OFF RECORD Number | DATE | TYPE INST | Q / U | V / I | RSN CD | SALE PRICE |
|---|---|---|---|---|---|---|
| 2486/0229 | 8/09/2021 | WD | Q | I | 01 | 670,000 |
| GRANTOR: BELL MICHAEL M & MELI | | | | | | |
| GRANTEE: MILLER LIVING TRUST | | | | | | |
| 1501/0591 | 5/25/2007 | WD | Q | I | | 419,000 |
| GRANTOR: MOELLER BUILDERS INC | | | | | | |
| GRANTEE: BELL MICHAEL M & ME | | | | | | |

## BUILDING NOTES

## BUILDING DIMENSIONS

FSP=[YR=2010] W15 BAS=[YR=2006] W12 UOP=[YR=2010] N11 W10 S11 E10 $ W25 S15 FGR=[YR=2006] S22 E22 N22 W22$ E22 S28 FOP=[YR=2006] S7 E10 STP=[YR=2006] S3 E6 N3 W6$ E20 N7 W30$ E30 N28 W8 N4 W7 N11$ S11 E7 S4 E8N15$ PTR=E15 FUS=[YR=2006] E15 S23 E11 N12 E9 BAL=[YR=2006] N11 E15 S15 W8 N4 W7$E7 S4 E2 S8 W2 S27 W18 N24 W9 S11 W15 N37$ W15$.

## EXTRA FEATURES

| LN | OB/XF CODE | DESCRIPTION | BLD | CAP | L | W | UNITS | UT | Adj R | ADJ UNIT PRICE | ORIG COND | YEAR ON | YEAR ACTUAL | Q | % COND | OB/XF MKT VALUE | NOTES |
|---|---|---|---|---|---|---|---|---|---|---|---|---|---|---|---|---|---|
| 1 | 0810 | CONCRETE A | 0 | 100 | 0 | 0 | 195.00 | SF | 6.50 | 6.50 | 100 | 2006 | 2006 | 3 | 86 | 1,090 | |
| 2 | 0855 | CONC PAVER | 0 | 100 | 0 | 0 | 672.00 | SF | 10.00 | 10.00 | 100 | 2006 | 2006 | 3 | 86 | 5,779 | |
| 3 | 0500 | FP-PRE FAB | 0 | 100 | 0 | 0 | 1.00 | UT | 3,500.00 | 3,500.00 | 100 | 2006 | 2006 | 3 | 89 | 3,115 | |
| 4 | 0855 | CONC PAVER | 0 | 100 | 0 | 0 | 1,123.00 | SF | 10.00 | 10.00 | 100 | 2010 | 2010 | 3 | 90 | 10,107 | |
| 5 | 0504 | FP-ELECTRI | 0 | 100 | 0 | 0 | 1.00 | UT | 2,000.00 | 2,000.00 | 100 | 2010 | 2010 | 3 | 93 | 1,860 | |
| 6 | 0600 | SUMMER KIT | 0 | 100 | 0 | 0 | 1.00 | UT | 10,000.00 | 10,000.00 | 100 | 2010 | 2010 | 3 | 40 | 4,000 | |

## LAND DESCRIPTION

TOTAL OB/XF 25,951

| LN | USE CODE | CLS | LAND USE DESCRIPTION | CAP | RD | LOC ZONE | FRONT | DEPTH | TOT LND UTS | UNIT TYPE | DT | DPTH FACT | % COND | TOT ADJ | UNIT PRICE | ADJ UNIT PRICE | LAND VALUE | OTHER ADJUSTMENTS AND NOTES | YEAR | DENSITY | DECL | FRZ | YR | CONSRV |
|---|---|---|---|---|---|---|---|---|---|---|---|---|---|---|---|---|---|---|---|---|---|---|---|---|
| 1 | 000134 | C | RES POND | 100 | 0003 | PUD | 0.00 | 0.00 | 1.00 | LT | | 1.00 | 1.00 | 1.00 | 142,500.00 | 142,500.00 | 142,500 | | | | | | | |

REVIEW DATE 05/04/2020 BY KWA Total Acres: 0.00 Total Land Value: 142,500 Market: 0 Agricultural: 0 Common: 142,500 PRINTED 07/30/2025 BY SYS