LOTS 20 & 21
THE COVE @ OYSTER BAY PB 6/79

ZAWACKI CHESTER S & LYNN M
96161 PARK PLACE
FERNANDINA BEACH, FL 32034

2025

46-3N-28-5065-0021-0000

BUILDING CHARACTERISTICS

ELEMENT	CD	CONSTRUCTION
Exterior Wall	16	WD FR STUC 100
Roof Structur	08	IRREGULAR 100
Roof Cover	13	STAND SEAM 100
Interior Wall	05	DRYWALL 100
Interior Floo	12	HARDWOOD 50
Interior Floo	14	CARPET 50
Air Condition	03	CENTRAL 100
Heating Type	04	AIR DUCTED 100
Bedrooms		3 100
Bathrooms		2 100
Frame	02	WOOD FRAME 100
Stories	1.	1. 100
Units		0 100
Occupancy	00	NONE 100
Quality	04	Quality Level 04
DOR CODE	0100	SINGLE FAMILY
MAP NUM		MKT AREA 04
NEIGHBORHOOD/LOC	4024.00	

AREA TYPE	TOTAL GROSS AREA	PCT OF BASE	YEAR	TOT ADJ AREA	SUBAREA MARKET VALUE
BAS	2,419	100	2003	2,419	414,741
FGR	484	55	2003	266	45,606
FOP	54	30	2003	16	2,743
FOP	88	30	2003	26	4,457
FSP	476	40	2003	190	32,575
TOTALS	3,521			2,917	500,123

MARKET ADJUSTMENTS

TYPE	MDL	EFF. AREA	TOT ADJ PTS	EFF. BASE RATE	REPL. COST NEW	AYB	EYB	ECON	FNCT		NORM	% COND
0500	01	2,917	117.9465	186.36	543,612	2003	2008	0	0	0	8.00	92.00

1 SFR CUST – 100% - 2022 Heated Area: 2419 HX Base Yr 2022

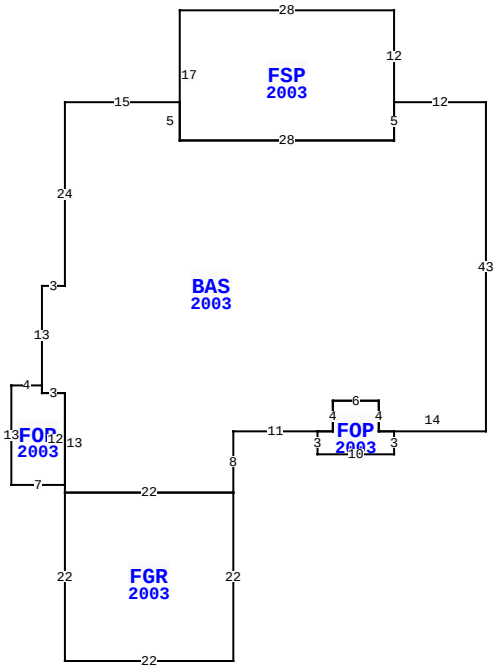

96161 PARK PL, FERNANDINA BEACH

BLD DATE		LGL DATE	
XF DATE		LAND DATE	05/08/2025 MLU
INC DATE		AG DATE	

NASSAU COUNTY PROPERTY

PAGE 1 of 1 4

VALUATION SUMMARY

VALUATION BY		STANDARD
Tax Group: 4	Tax Dist:	
BUILDING MARKET VALUE		500,123
TOTAL MARKET OB/XF VALUE		14,204
TOTAL LAND VALUE - MARKET		285,000
TOTAL MARKET VALUE		799,327
SOH/AGL Deduction		179,253
ASSESSED VALUE		620,074
TOTAL EXEMPTION VALUE	HX HB	50,722
BASE TAXABLE VALUE		569,352
TOTAL JUST VALUE		799,327
NCON VALUE		0
INCOME VALUE		
PREVIOUS YEAR MKT VALUE		771,786

PERMIT NUM	DESCRIPTION	AMT	ISSUED
B0210111	NEW CONSTR	220,000	08/01/2002

SALES DATA

OFF RECORD Number	DATE	TYPE INST	Q U	V I	RSN CD	SALE PRICE
2537/1882	2/08/2022	WD	Q	V	03	155,000
GRANTOR: MOUNTAIN WEST IRA INC						
GRANTEE: ZAWACKI CHESTER S &						
2523/1851	11/16/2021	WD	U	I	11	100
GRANTOR: ZAWACKI CHESTER S & L						
GRANTEE: ZAWACKI CHESTER S &						

BUILDING NOTES

BUILDING DIMENSIONS

BAS=[YR=2003] W12 FSP=[YR=2003] N12 W28 S17 E28 N5$ S5 W28 N5 W15 S24 W3 S13 FOP=[YR=2003] W4 S13 E7 N12 W3 N1$ S1 E3 S13 FGR=[YR=2003] S22 E22 N22 W22$ E22 N8 E11 FOP=[YR=2003] S3 E10 N3 W2 N4 W6 S4 W2$ E2 N4 E6 S4 E14 N43$.

EXTRA FEATURES

LN	OB/XF CODE	DESCRIPTION	BLD	CAP	L	W	UNITS	UT	Adj R	ADJ UNIT PRICE	ORIG COND	YEAR ON	YEAR ACTUAL	Q	% COND	OB/XF MKT VALUE	NOTES
1	0855	CONC PAVER	0	100	0	0	1,312.00	SF	10.00	10.00	100	2003	2003	3	82	10,758	
2	1123	CB 8"	0	100	0	0	485.00	SF	6.15	6.15	100	2003	2003	3	82	2,446	
3	0600	SUMMER KIT	0	100	0	0	1.00	UT	5,000.00	5,000.00	100	2003	2003	3	20	1,000	

LAND DESCRIPTION

TOTAL OB/XF 14,204

LN	USE CODE	CLS	LAND USE DESCRIPTION	CAP	RD	LOC ZONE	FRONT	DEPTH	TOT LND UTS	UNIT TYPE	DT	DPTH FACT	% COND	TOT ADJ	UNIT PRICE	ADJ UNIT PRICE	LAND VALUE	OTHER ADJUSTMENTS AND NOTES	YEAR	DENSITY	DECL	FRZ	YR	CONSRV
1	000134	C	RES POND	100		PUD	0.00	0.00	1.00	LT		1.00	1.00	1.00	142,500.00	142,500.00	142,500							
2	000134	C	RES POND	100		PUD	0.00	0.00	1.00	LT		1.00	1.00	1.00	142,500.00	142,500.00	142,500							

REVIEW DATE 01/14/2020 BY TWA Total Acres: 0.00 Total Land Value: 285,000 Market: 0 Agricultural: 0 Common: 285,000 PRINTED 07/30/2025 BY SYS