LOT 7
THE COVE @ OYSTER BAY PB 6/79

LOGSDON JAMES R & JANICE M L/E/
96188 PARK PL
FERNANDINA BEACH, FL 32034

2025

46-3N-28-5065-0007-0000

BUILDING CHARACTERISTICS

ELEMENT	CD	CONSTRUCTION
Exterior Wall	31	HARDIE BRD 100
Roof Structur	04	WOOD TRUSS 100
Roof Cover	03	COMP SHNGL 100
Interior Wall	05	DRYWALL 100
Interior Floo	12	HARDWOOD 80
Interior Floo	11	CLAY TILE 20
Air Condition	03	CENTRAL 100
Heating Type	04	AIR DUCTED 100
Bedrooms		3 100
Bathrooms		2.5 100
Frame	02	WOOD FRAME 100
Stories	2.	2. 100
Units		0 100
Occupancy	00	NONE 100
Quality	04	Quality Level 04
DOR CODE	0100	SINGLE FAMILY
MAP NUM		MKT AREA 04
NEIGHBORHOOD/LOC	4024.00	

AREA TYPE	TOTAL GROSS AREA	PCT OF BASE	YEAR	TOT ADJ AREA	SUBAREA MARKET VALUE
BAS	2,360	100	2022	2,360	511,837
FGR	697	55	2022	383	83,066
FOP	168	30	2022	50	10,845
FSP	228	40	2022	91	19,736
FST	12	55	2022	7	1,518
FUS	245	100	2022	245	53,136
STR	32	10	2022	3	651
STR	33	10	2022	3	651
TOTALS	3,775			3,142	681,438

MARKET ADJUSTMENTS

TYPE	MDL	EFF. AREA	TOT ADJ PTS	EFF. BASE RATE	REPL. COST NEW	AYB	EYB	ECON	FNCT		NORM	% COND
0500	11	3,142	137.9558	217.97	684,862	2022	2022	0	0	0	0.50	99.50

1 SFR CUST – 100% - 2023 Heated Area: 2605 HX Base Yr 2023

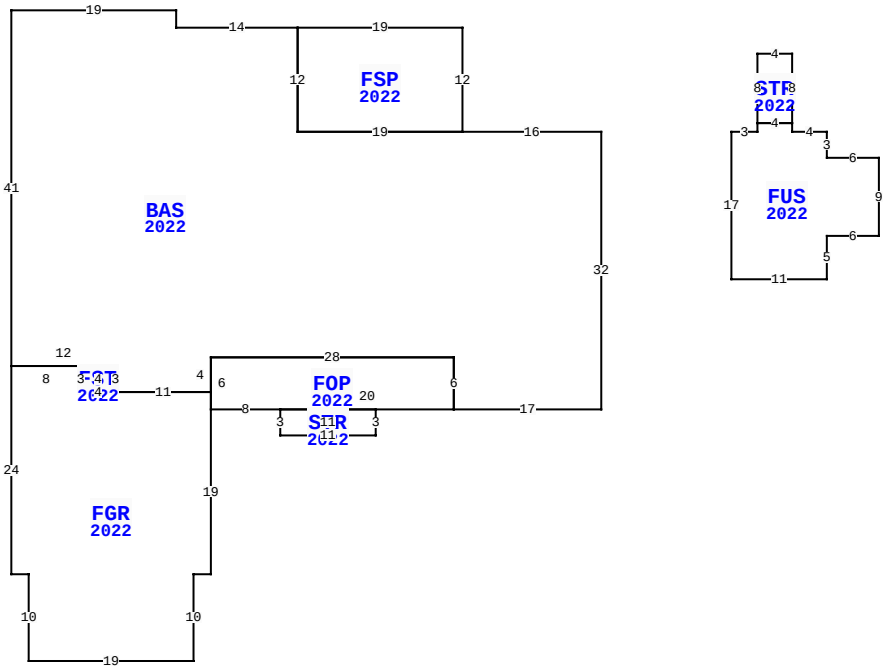

96188 PARK PL, FERNANDINA BEACH

BLD DATE		LGL DATE	
XF DATE		LAND DATE	05/08/2025 MLU
INC DATE		AG DATE	

NASSAU COUNTY PROPERTY

PAGE 1 of 1 4

VALUATION SUMMARY

VALUATION BY		STANDARD
Tax Group: 4	Tax Dist:	
BUILDING MARKET VALUE		681,438
TOTAL MARKET OB/XF VALUE		22,136
TOTAL LAND VALUE - MARKET		142,500
TOTAL MARKET VALUE		846,074
SOH/AGL Deduction		300,359
ASSESSED VALUE		545,715
TOTAL EXEMPTION VALUE	HX HB	50,722
BASE TAXABLE VALUE		494,993
TOTAL JUST VALUE		846,074
NCON VALUE		0
INCOME VALUE		
PREVIOUS YEAR MKT VALUE		812,534

PERMIT NUM	DESCRIPTION	AMT	ISSUED
C2104796	CO ISSUED	0	05/16/2022
B2104796	NEW CONSTR	365,964	04/19/2021

SALES DATA

OFF RECORD Number	DATE	TYPE INST	Q U	V I	RSN CD	SALE PRICE
2646/219	5/31/2023	LE	U	I	11	100
GRANTOR: LOGSDON JAMES R & JAN						
GRANTEE: LOGSDON JACOB T						
2390/0944	9/09/2020	WD	Q	V	01	85,000
GRANTOR: GERKE JASON & COLLEEN						
GRANTEE: LOGSDON JAMES R & J						

BUILDING NOTES

BUILDING DIMENSIONS

BAS=[YR=2022] W16 FSP=[YR=2022] N12 W19 S12 E19$ W19 N12 W14 N2 W19 S41 FGR=[YR=2022] S24 E2 S10 E19 N10 E2 N19 FOP=[YR=2022] E8 STR=[YR=2022] S3 E11N3W11$ E20 N6 W28 S6$ N2 W11 FST=[YR=2022] N3W4S3E4$ W4N3 W8$ E12 S3 E11 N4 E28 S6 E17 N32$ PTR=E15 FUS=[YR=2022] E3N1 STR=[YR=2022] N8E4S8W4$ E4 S1 E4 S3 E6 S9 W6 S5 W11 N17$ W15$.

EXTRA FEATURES

LN	OB/XF CODE	DESCRIPTION	BLD	CAP	L	W	UNITS	UT	Adj R	ADJ UNIT PRICE	ORIG COND	YEAR ON	YEAR ACTUAL	Q	% COND	OB/XF MKT VALUE	NOTES
1	0504	FP-ELECTRI	0	100	0	0	1.00	UT	2,000.00	2,000.00	100	2022	2022	3	99	1,980	
2	0855	CONC PAVER	0	100	0	0	2,036.00	SF	10.00	10.00	100	2022	2022	3	99	20,156	

LAND DESCRIPTION

TOTAL OB/XF 22,136

LN	USE CODE	CLS	LAND USE DESCRIPTION	CAP	RD	LOC ZONE	FRONT	DEPTH	TOT LND UTS	UNIT TYPE	DT	DPTH FACT	% COND	TOT ADJ	UNIT PRICE	ADJ UNIT PRICE	LAND VALUE	OTHER ADJUSTMENTS AND NOTES	YEAR	DENSITY	DECL	FRZ	YR	CONSRV
1	000134	C	RES POND	100		PUD	0.00	0.00	1.00	LT		1.00	1.00	1.00	142,500.00	142,500.00	142,500							

REVIEW DATE 09/14/2022 BY DJ Total Acres: 0.00 Total Land Value: 142,500 Market: 0 Agricultural: 0 Common: 142,500 PRINTED 07/30/2025 BY SYS