IN OR 1259/595
EX ESMT PT OR 1483/426

YOUNG STEPHEN S
96094 AZALEA LN
FERNANDINABEACH, FL 32034

2025

46-3N-28-0000-0003-0040

NASSAU COUNTY PROPERTY

BUILDING CHARACTERISTICS

ELEMENT	CD	CONSTRUCTION
Exterior Wall	12	CEDAR 100
Roof Structur	08	IRREGULAR 100
Roof Cover	03	COMP SHNGL 100
Interior Wall	05	DRYWALL 100
Interior Floo	12	HARDWOOD 50
Interior Floo	14	CARPET 50
Air Condition	03	CENTRAL 100
Heating Type	04	AIR DUCTED 100
Bedrooms		3 100
Bathrooms		2.5 100
Frame	02	WOOD FRAME 100
Stories	2.	2. 100
Units		0 100
Occupancy	00	NONE 100
Quality	04	Quality Level 04
DOR CODE	0100	SINGLE FAMILY
MAP NUM		MKT AREA 04
NEIGHBORHOOD/LOC	4020.00	

AREA TYPE	TOTAL GROSS AREA	PCT OF BASE	YEAR	TOT ADJ AREA	SUBAREA MARKET VALUE
BAS	1,806	100	1998	1,806	234,672
FGR	762	55	2010	419	54,445
FOP	208	30	1998	62	8,056
FOP	288	30	1998	86	11,175
FUS	525	100	1998	525	68,219
FUS	520	100	2010	520	67,569
STR	60	10	2010	6	780
TOTALS	4,169			3,424	444,915

MARKET ADJUSTMENTS

TYPE	MDL	EFF. AREA	TOT ADJ PTS	EFF. BASE RATE	REPL. COST NEW	AYB	EYB	ECON	FNCT		NORM	% COND
0900	01	3,424	110.6070	146.00	499,904	1998	2002	0	0	0	11.00	89.00

1 SNGL FAM – 100% - 2007 Heated Area: 2851 HX Base Yr 2007

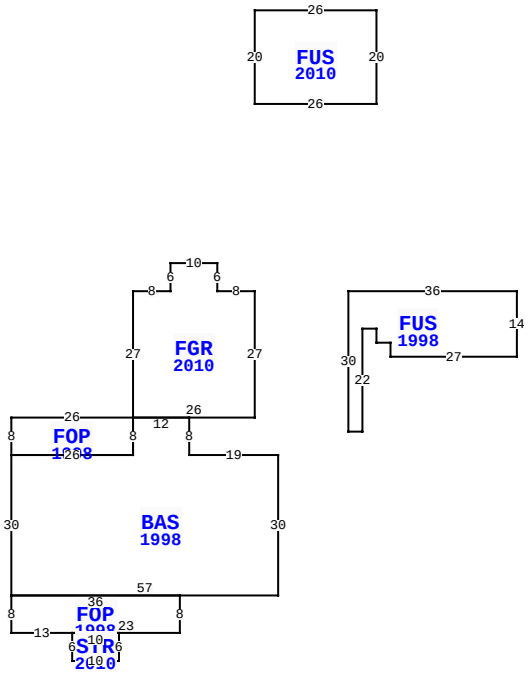

96094 AZALEA LN, FERNANDINA BEACH

BLD DATE		LGL DATE	
XF DATE		LAND DATE	05/07/2025 MLU
INC DATE		AG DATE	

NASSAU COUNTY PROPERTY — VALUATION SUMMARY

VALUATION BY		STANDARD
Tax Group: 4	Tax Dist:	
BUILDING MARKET VALUE		450,584
TOTAL MARKET OB/XF VALUE		21,992
TOTAL LAND VALUE - MARKET		374,500
TOTAL MARKET VALUE		847,076
SOH/AGL Deduction		359,661
ASSESSED VALUE		487,415
TOTAL EXEMPTION VALUE	HX HB	50,722
BASE TAXABLE VALUE		436,693
TOTAL JUST VALUE		847,076
NCON VALUE		0
INCOME VALUE		
PREVIOUS YEAR MKT VALUE		794,003

PERMIT NUM	DESCRIPTION	AMT	ISSUED
R2003068	REPAIR/RRF	0	04/01/2020
B1800995	(3) NEW WINDOWS	1,720	02/01/2018
M17473	H/AC	0	08/01/2012

SALES DATA

OFF RECORD Number	DATE	TYPE INST	Q U	V I	RSN CD	SALE PRICE
1275/0627	11/18/2004	WD	U	I	07	100
GRANTOR: MCCRANIE MICHAEL S &						
GRANTEE: YOUNG STEPHEN S						
1259/0595	9/15/2004	WD	Q	I		710,000
GRANTOR: MCCRANIE MICHAEL S &						
GRANTEE: YOUNG STEPHEN S						

BUILDING NOTES

BUILDING DIMENSIONS

FGR=[YR=2010] W8 N6 W10 S6 W8 S27 FOP=[YR=1998] W26 S8 BAS=[YR=1998] S30 FOP=[YR=1998] S8 E13STR=[YR=2010] S6 E10 N6W10$ E23 N8 W36 $ E57 N30 W19 N8 W12 S8W26 $ E26 N8 $ E26 N27 $ PTR= E20 FUS=[YR=1998] E36 S14 W27 N3 W3N3 W3 S22 W3 N30 $ W20 $PTR=N40 FUS=[YR=2010] N20 E26 S20 W26 $ S40 $.

EXTRA FEATURES

LN	OB/XF CODE	DESCRIPTION	BLD	CAP	L	W	UNITS	UT	Adj R	ADJ UNIT PRICE	ORIG COND	YEAR ON	YEAR ACTUAL	Q	% COND	OB/XF MKT VALUE	NOTES
1	0500	FP-PRE FAB	0	100	0	0	1.00	UT	3,500.00	3,500.00	100	1998	1998	3	80	2,800	
2	0812	CONCRETE C	0	100	0	0	2,936.00	SF	4.00	4.00	100	2001	2001	3	79	9,278	
3	0812	CONCRETE C	0	100	0	0	2,986.00	SF	4.00	4.00	100	2004	2004	3	83	9,914	

LAND DESCRIPTION

TOTAL OB/XF 21,992

LN	USE CODE	CLS	LAND USE DESCRIPTION	CAP	RD	LOC ZONE	FRONT	DEPTH	TOT LND UTS	UNIT TYPE	DT	DPTH FACT	% COND	TOT ADJ	UNIT PRICE	ADJ UNIT PRICE	LAND VALUE	OTHER ADJUSTMENTS AND NOTES	YEAR	DENSITY	DECL	FRZ	YR	CONSRV
1	000131	C	RES CREEK	100		RSF-	1250.00	350.00	2.14	AC		1.00	1.00	1.00	175,000.00	175,000.00	374,500							

REVIEW DATE 01/19/2023 BY DJA Total Acres: 2.14 Total Land Value: 374,500 Market: 0 Agricultural: 0 Common: 374,500 PRINTED 07/30/2025 BY SYS

IN OR 1259/595
EX ESMT PT OR 1483/426

YOUNG STEPHEN S
96094 AZALEA LN
FERNANDINABEACH, FL 32034

2025

46-3N-28-0000-0003-0040

NASSAU COUNTY PROPERTY

BUILDING CHARACTERISTICS

ELEMENT	CD	CONSTRUCTION
Exterior Wall	12	CEDAR 100
Roof Structur	03	GABLE/HIP 100
Roof Cover	03	COMP SHNGL 100
Interior Wall	05	DRYWALL 100
Interior Floo	03	CONC FINSH 100
Air Condition	01	NONE 100
Heating Type	01	NONE 100
Bedrooms		0 100
Bathrooms		0 100
Frame	02	WOOD FRAME 100
Stories	1.	1. 100
Units		0 100
Occupancy	00	NONE 100
Quality	06	Quality Level 06

DOR CODE 0100 SINGLE FAMILY
MAP NUM | MKT AREA 04
NEIGHBORHOOD/LOC 4020.00

AREA TYPE	TOTAL GROSS AREA	PCT OF BASE	YEAR	TOT ADJ AREA	SUBAREA MARKET VALUE
BAS	192	100	1999	192	4,252
FCP	200	25	1999	50	1,108
FOP	48	30	1999	14	310
TOTALS	440			256	5,669

MARKET ADJUSTMENTS

TYPE	MDL	EFF. AREA	TOT ADJ PTS	EFF. BASE RATE	REPL. COST NEW	AYB	EYB	ECON	FNCT		NORM	% COND
6500	01	256	104.9950	38.85	9,946	1999	1999	0	0	0	43.00	57.00

2 GARAGE RES – 100% - 2007 Heated Area: 192 HX Base Yr 2007

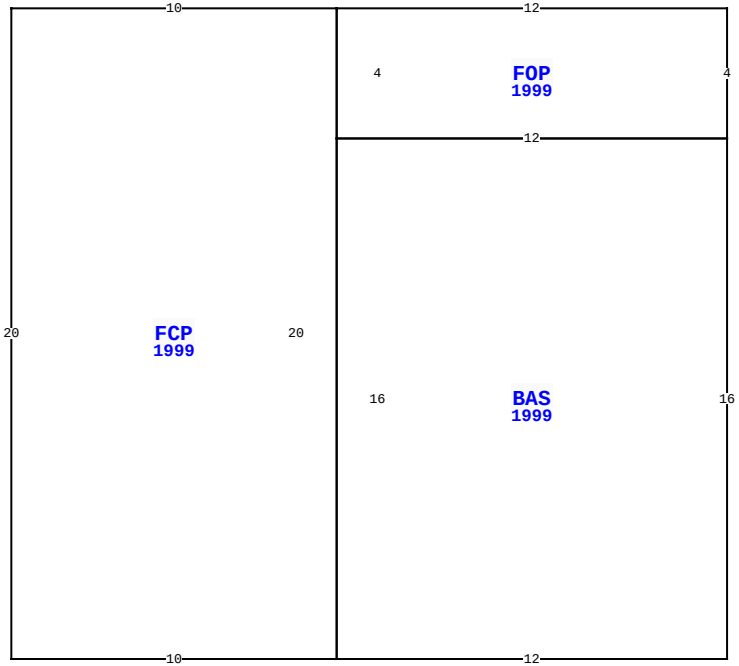

96094 AZALEA LN, FERNANDINA BEACH

BLD DATE		LGL DATE	
XF DATE		LAND DATE	05/07/2025 MLU
INC DATE		AG DATE	

VALUATION SUMMARY

VALUATION BY		STANDARD
Tax Group: 4	Tax Dist:	
BUILDING MARKET VALUE		450,584
TOTAL MARKET OB/XF VALUE		21,992
TOTAL LAND VALUE - MARKET		374,500
TOTAL MARKET VALUE		847,076
SOH/AGL Deduction		359,661
ASSESSED VALUE		487,415
TOTAL EXEMPTION VALUE	HX HB	50,722
BASE TAXABLE VALUE		436,693
TOTAL JUST VALUE		847,076
NCON VALUE		0
INCOME VALUE		
PREVIOUS YEAR MKT VALUE		794,003

PERMIT NUM	DESCRIPTION	AMT	ISSUED

SALES DATA

OFF RECORD Number	DATE	TYPE INST	Q / U	V / I	RSN CD	SALE PRICE
1275/0627	11/18/2004	WD	U	I	07	100
GRANTOR: MCCRANIE MICHAEL S &						
GRANTEE: YOUNG STEPHEN S						
1259/0595	9/15/2004	WD	Q	I		710,000
GRANTOR: MCCRANIE MICHAEL S &						
GRANTEE: YOUNG STEPHEN S						

BUILDING NOTES

BUILDING DIMENSIONS

FOP=[YR=1999] W12 FCP=[YR=1999] W10 S20 E10 BAS=[YR=1999] E12 N16 W12 S16 $ N20$ S4 E12 N4 $.

EXTRA FEATURES

L N	OB/XF CODE	DESCRIPTION	BLD	CAP	L	W	UNITS	UT	Adj R	ADJ UNIT PRICE	ORIG COND	YEAR ON	YEAR ACTUAL	Q	% COND	OB/XF MKT VALUE	NOTES

LAND DESCRIPTION

TOTAL OB/XF 0

L N	USE CODE	CLS	LAND USE DESCRIPTION	CAP	R D	LOC ZONE	FRONT	DEPTH	TOT LND UTS	UNIT TYPE	D T	DPTH FACT	% COND	TOT ADJ	UNIT PRICE	ADJ UNIT PRICE	LAND VALUE	OTHER ADJUSTMENTS AND NOTES	YEAR	DENSITY	DECL	FRZ	YR	CONSRV

REVIEW DATE 01/19/2023 BY DJA Total Acres: 2.14 Total Land Value: 374,500 Market: 0 Agricultural: 0 Common: 374,500 PRINTED 07/30/2025 BY SYS