BLOCK 16 LOT 1
CONSERV ESMT PT OR 929/824
SPRING LAKE EST 4 REPLAT

DOANE JUSTIN & ELLICE
55459 BEAR RUN RD
CALLAHAN, FL 32011

2025

46-2N-25-197D-0016-0010

NASSAU COUNTY PROPERTY

BUILDING CHARACTERISTICS

ELEMENT	CD	CONSTRUCTION
Exterior Wall	16	WD FR STUC 60
Exterior Wall	17	CB STUCCO 40
Roof Structur	03	GABLE/HIP 100
Roof Cover	03	COMP SHNGL 100
Interior Wall	05	DRYWALL 100
Interior Floo	14	CARPET 70
Interior Floo	08	SHT VINYL 30
Air Condition	03	CENTRAL 100
Heating Type	04	AIR DUCTED 100
Bedrooms		3 100
Bathrooms		2.5 100
Frame	02	WOOD FRAME 100
Stories	2.	2. 100
Units		0 100
Occupancy	00	NONE 100
Quality	03	Quality Level 03
DOR CODE	0100	SINGLE FAMILY
MAP NUM		MKT AREA 08
NEIGHBORHOOD/LOC	8010.00	

AREA TYPE	TOTAL GROSS AREA	PCT OF BASE	YEAR	TOT ADJ AREA	SUBAREA MARKET VALUE
BAS	1,120	100	2004	1,120	138,721
FGR	420	55	2004	231	28,611
FOP	24	30	2004	7	867
FUS	1,088	100	2004	1,088	134,758
PTO	180	5	2004	9	1,115
TOTALS	2,832			2,455	304,071

MARKET ADJUSTMENTS

TYPE	MDL	EFF. AREA	TOT ADJ PTS	EFF. BASE RATE	REPL. COST NEW	AYB	EYB	ECON	FNCT		NORM	% COND
0900	01	2,455	104.2560	137.62	337,857	2004	2004	0	0	0	10.00	90.00

1 SNGL FAM – 100% - 2025 Heated Area: 2208 HX Base Yr 2025

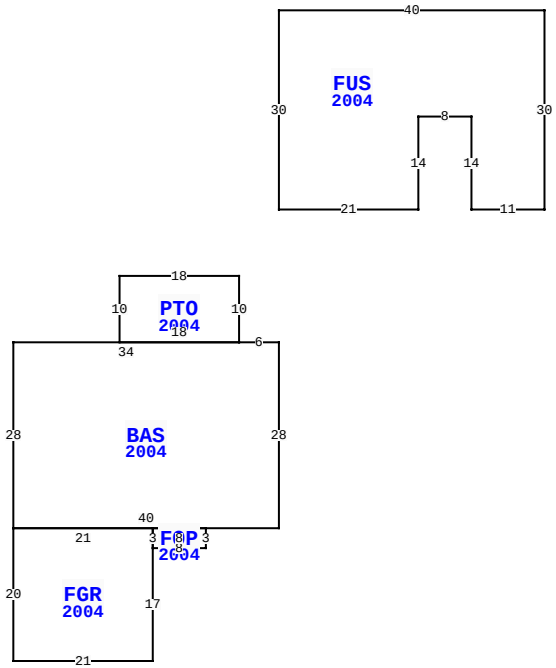

55459 BEAR RUN RD, CALLAHAN

BLD DATE		LGL DATE	
XF DATE		LAND DATE	04/04/2024 MLU
INC DATE		AG DATE	

VALUATION SUMMARY

VALUATION BY		STANDARD
Tax Group: 6	Tax Dist:	
BUILDING MARKET VALUE		304,071
TOTAL MARKET OB/XF VALUE		3,871
TOTAL LAND VALUE - MARKET		55,000
TOTAL MARKET VALUE		362,942
SOH/AGL Deduction		0
ASSESSED VALUE		362,942
TOTAL EXEMPTION VALUE	HX HB	50,722
BASE TAXABLE VALUE		312,220
TOTAL JUST VALUE		362,942
NCON VALUE		0
INCOME VALUE		
PREVIOUS YEAR MKT VALUE		348,460

PERMIT NUM	DESCRIPTION	AMT	ISSUED
B12161	NEW CONSTR	160,818	01/01/2004
R5739	REPAIR/RRF	8,000	01/01/2004

SALES DATA

OFF RECORD Number	DATE	TYPE INST	Q U	V I	RSN CD	SALE PRICE
2530/0048	1/06/2022	WD	Q	I	01	335,000
GRANTOR: AGUILAR RINA						
GRANTEE: DOANE JUSTIN & ELLI						
1571/1333	6/13/2008	QC	Q	I	06	100
GRANTOR: DUTTON RANDELL LEE						
GRANTEE: AGUILAR RINA						

BUILDING NOTES

BUILDING DIMENSIONS

BAS=[YR=2004] W6 PTO=[YR=2004] N10 W18 S10 E18$ W34 S28 FGR=[YR=2004] S20 E21 N17 FOP=[YR=2004] E8 N3 W8 S3$ N3 W21$ E40 N28$ PTR=N20 FUS=[YR=2004] N30 E40 S30 W11 N14 W8 S14 W21 $ S20$.

EXTRA FEATURES

LN	OB/XF CODE	DESCRIPTION	BLD	CAP	L	W	UNITS	UT	Adj R	ADJ UNIT PRICE	ORIG COND	YEAR ON	YEAR ACTUAL	Q	% COND	OB/XF MKT VALUE	NOTES
1	0811	CONCRETE B	0	100	0	0	897.00	SF	5.20	5.20	100	2004	2004	3	83	3,871	

LAND DESCRIPTION

TOTAL OB/XF 3,871

LN	USE CODE	CLS	LAND USE DESCRIPTION	CAP	RD	LOC ZONE	FRONT	DEPTH	TOT LND UTS	UNIT TYPE	DT	DPTH FACT	% COND	TOT ADJ	UNIT PRICE	ADJ UNIT PRICE	LAND VALUE	OTHER ADJUSTMENTS AND NOTES	YEAR	DENSITY	DECL	FRZ	YR	CONSRV
1	000100	C	RES	100	0006	RSF-1	0.00	0.00	1.00	LT		1.00	1.00	1.00	55,000.00	55,000.00	55,000							

REVIEW DATE 01/06/2023 BY KWA Total Acres: 0.00 Total Land Value: 55,000 Market: 0 Agricultural: 0 Common: 55,000 PRINTED 07/30/2025 BY SYS